2.1 Rotor overall view

| Project | KUKATE34© | | |
|---|---|---|---|
| Titel | 2.1 Rotor | | |
| Mod. | Release Date 19.11.2021 | Spr. ENG | Page 1/4 |

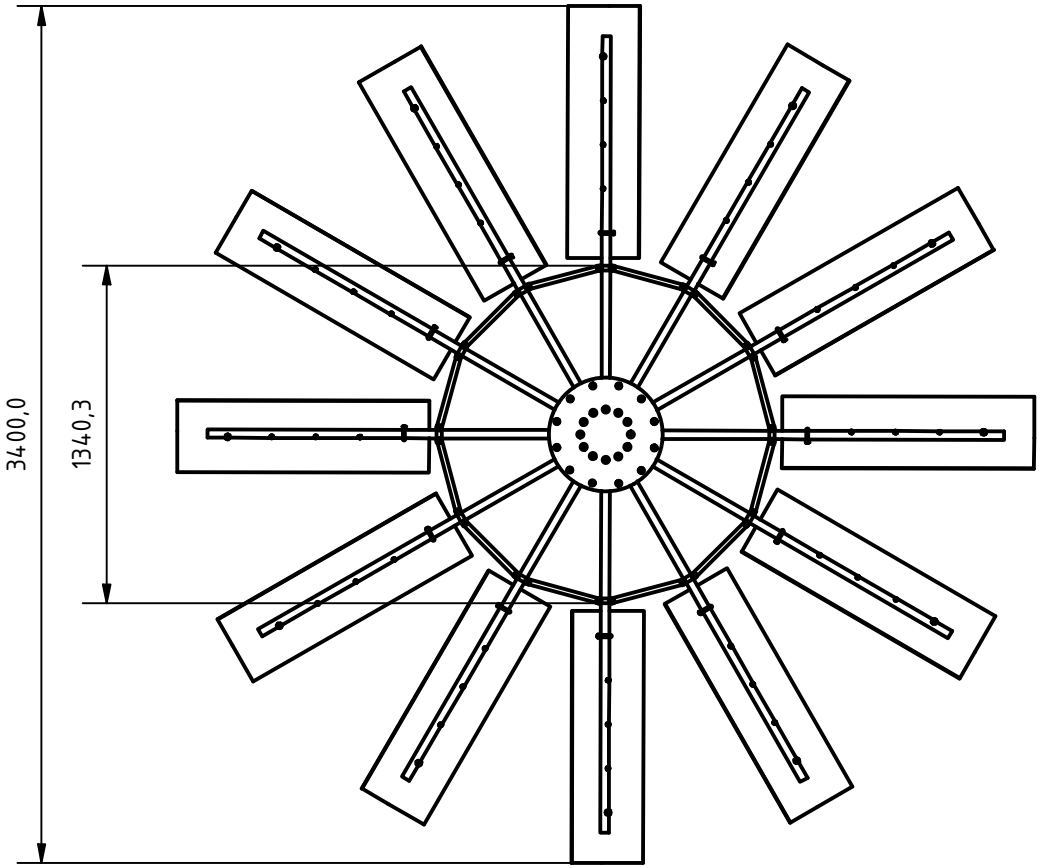


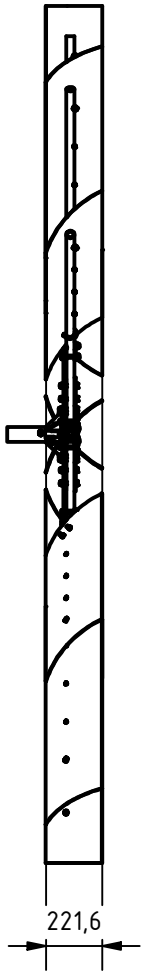

2.1 Rotor

| Project | KUKATE34© | | |
|---|---|---|---|
| Titel | 2.1 Rotor | | |
| Mod. | Release Date 27.08.2021 | Spr. ENG | Page 1/4 |

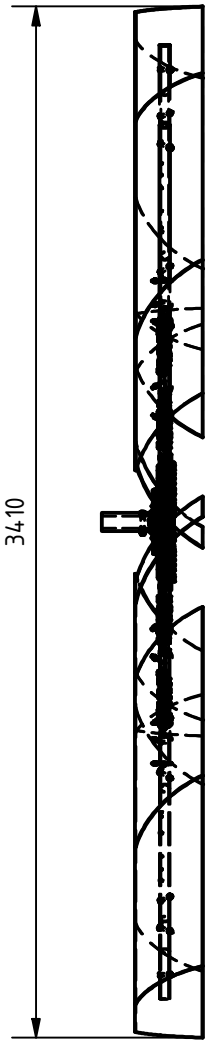


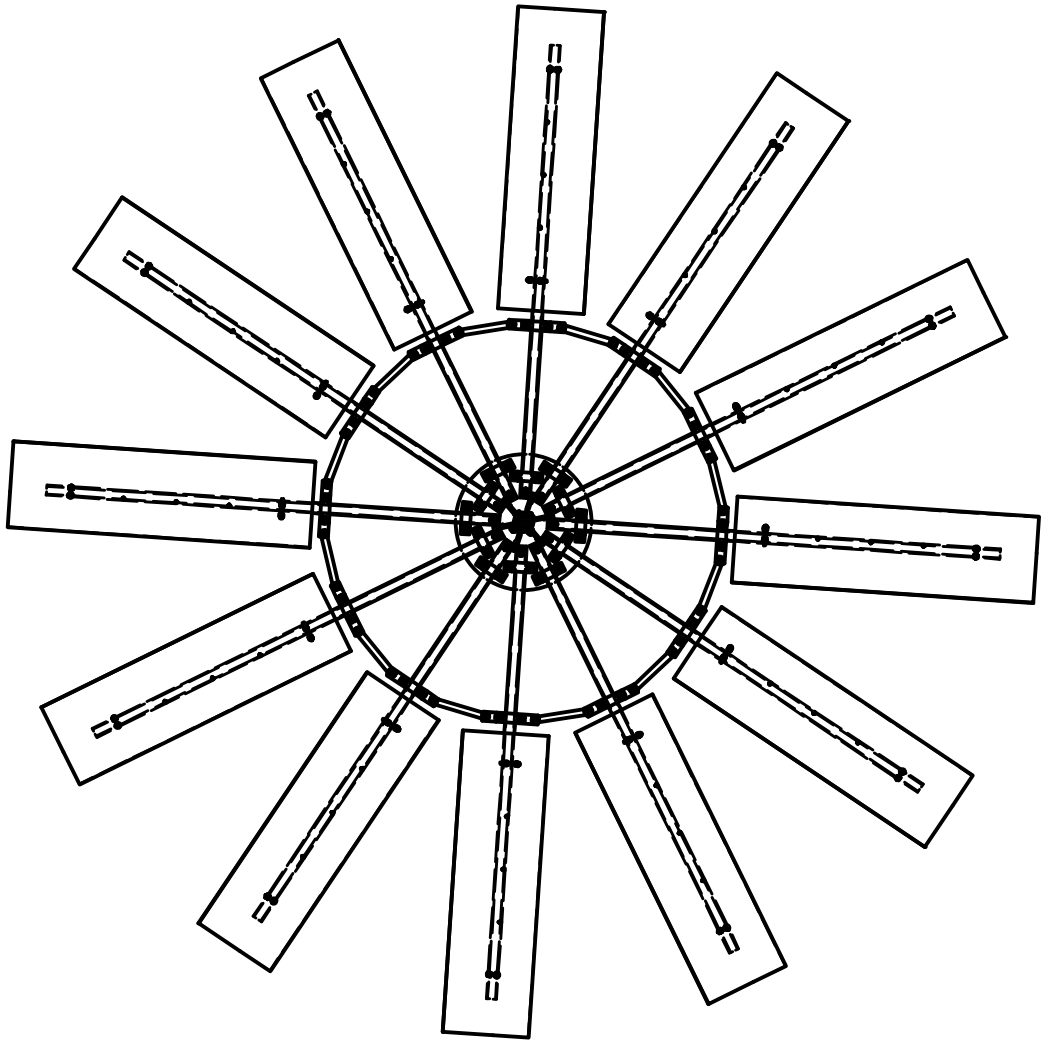

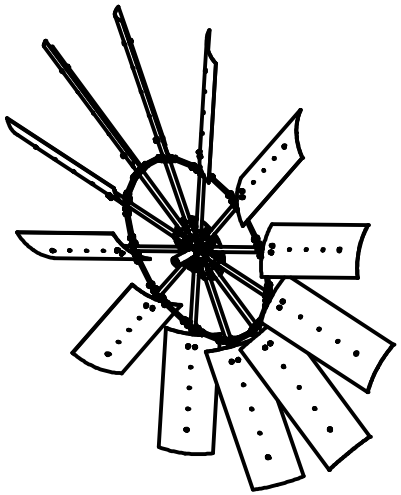

| Project | KUKATE34© | | |
|---|---|---|---|
| Titel | 2.1 Rotor | | |
| Mod. | Release Date 27.08.2021 | Spr. ENG | Page 2/4 |

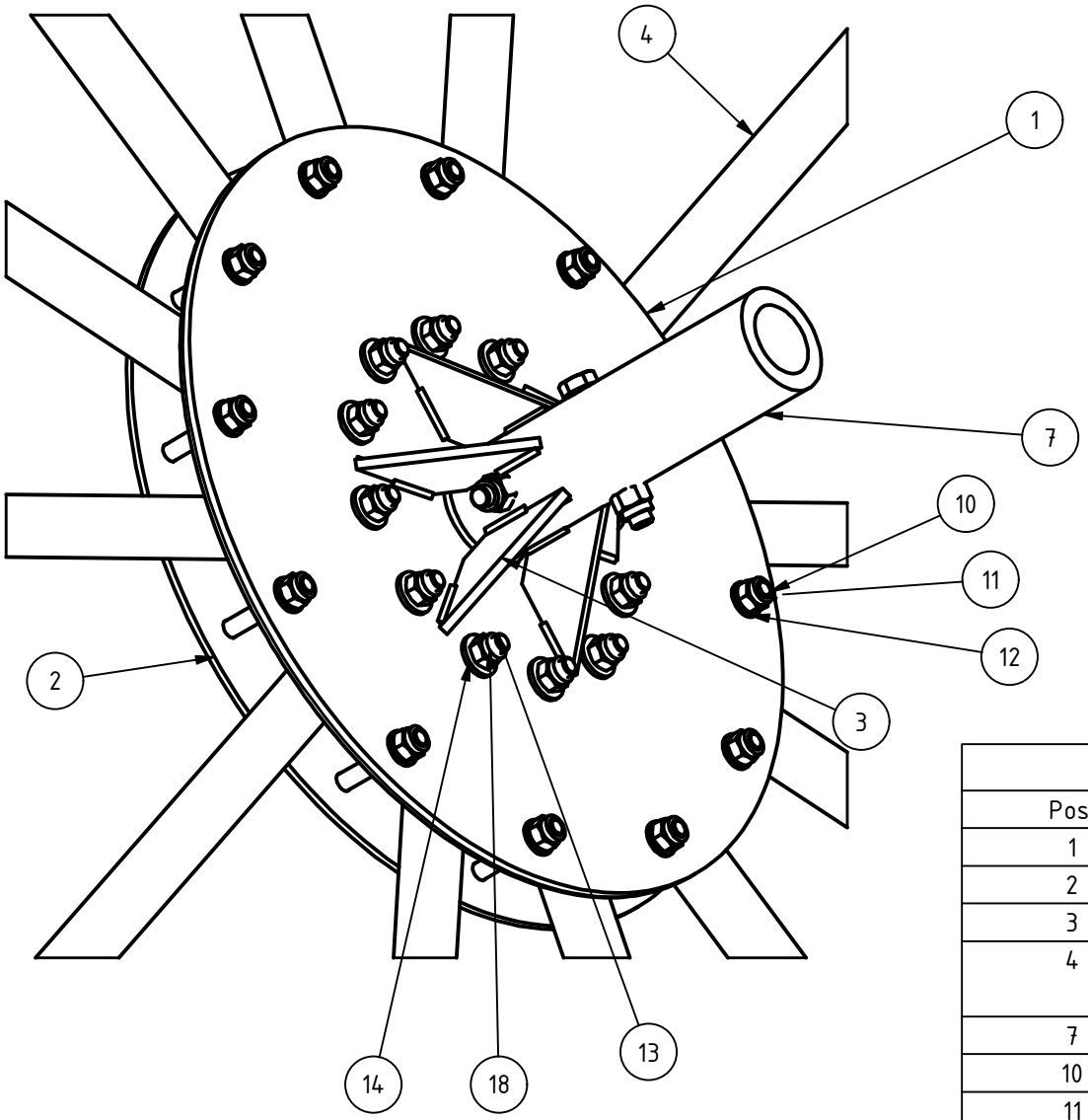


PART LIST

| Pos. | Name | Standard | Qty |
|---|---|---|---|
| 1 | Plate | DIN EN 10051 - 450x450x10 | 1 |
| 2 | Plate | DIN EN 10051 - 450x450x4 | 1 |
| 3 | Flat steel | DIN EN 10058 - 100x40x6 | 6 |
| 4 | Pipe | DIN EN 10220-1 - 33,7x4 - 1500 | 12 |
| 7 | Pipe | DIN 2448 - 60,3x10 -110 | 1 |
| 10 | Hexagon head screw | ISO 4017 -M10x65 -8.8 | 24 |
| 11 | Hex nut | ISO 4034-M10- 8.8 | 12 |
| 12 | Washer | ISO 7089 -10 | 24 |
| 13 | Hexagon head screw | ISO 4017 -M12x65 -8.8 | 12 |
| 18 | Hex nut | ISO 4034-M12- 8.8 | 12 |
| 17 | Hexagon head screw | ISO 4017 -M10x50 -8.8 | 12 |

| Project | KUKATE34© | | |
|---|---|---|---|
| Titel | 2.1 Rotor | | |
| Mod. | Release Date 27.08.2021 | Spr. ENG | Page 3/4 |

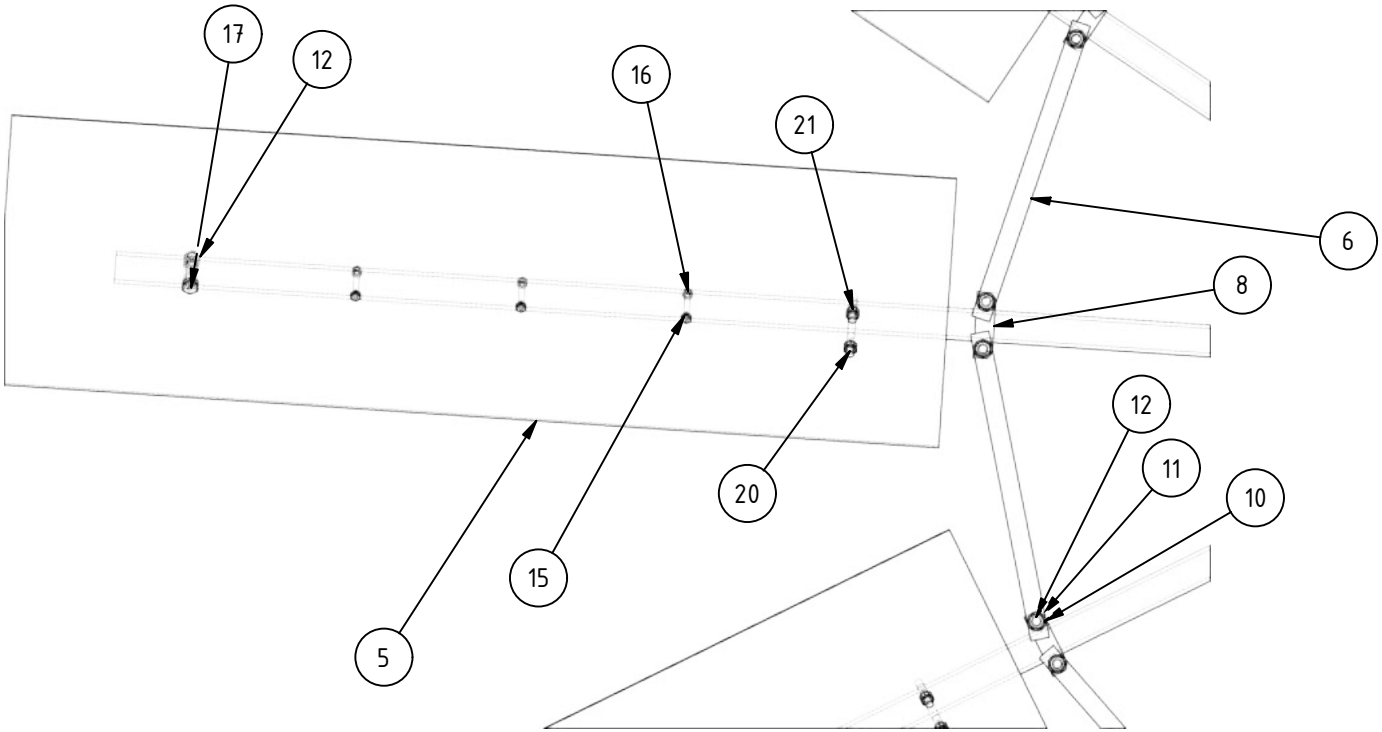


PART LIST

| Pos. | Name | Standard | Qty |
|---|---|---|---|
| 4 | Pipe | DIN EN 10220-1 - 33,7x4 - 1500 | 12 |
| 5 | Sheet | EN 10051 - 1000x370x2 | 12 |
| 6 | Flat steel | DIN EN 10058 - 330x20x5 | 12 |
| 8 | Flat steel | DIN EN 10058 - 70x20x5 | 24 |
| 10 | Hexagon head screw | ISO 4017 -M10x65 -8.8 | 24 |
| 11 | Hex nut | ISO 4034-M10- 8.8 | 12 |
| 12 | Washer | ISO 7089 -10 | 24 |
| 15 | Hexagon head screw | ISO 4017 -M6x45 -8.8 | 36 |
| 16 | Hex nut | ISO 4034-M6- 8.8 | 36 |
| 17 | Hexagon head screw | ISO 4017 -M10x50 -8.8 | 12 |
| 20 | Round steel shackles | DIN 3570 - M8 | 12 |
| 21 | Hex nut | ISO 4034-M8- 8.8 | 24 |

2.1 Welding

| Project | KUKATE34© | | |
|---|---|---|---|
| Titel | 2.1 Rotor | | |
| Mod. | Release Date 27.08.2021 | Spr. ENG | Page 4/4 |

avoid too much heat in one spot

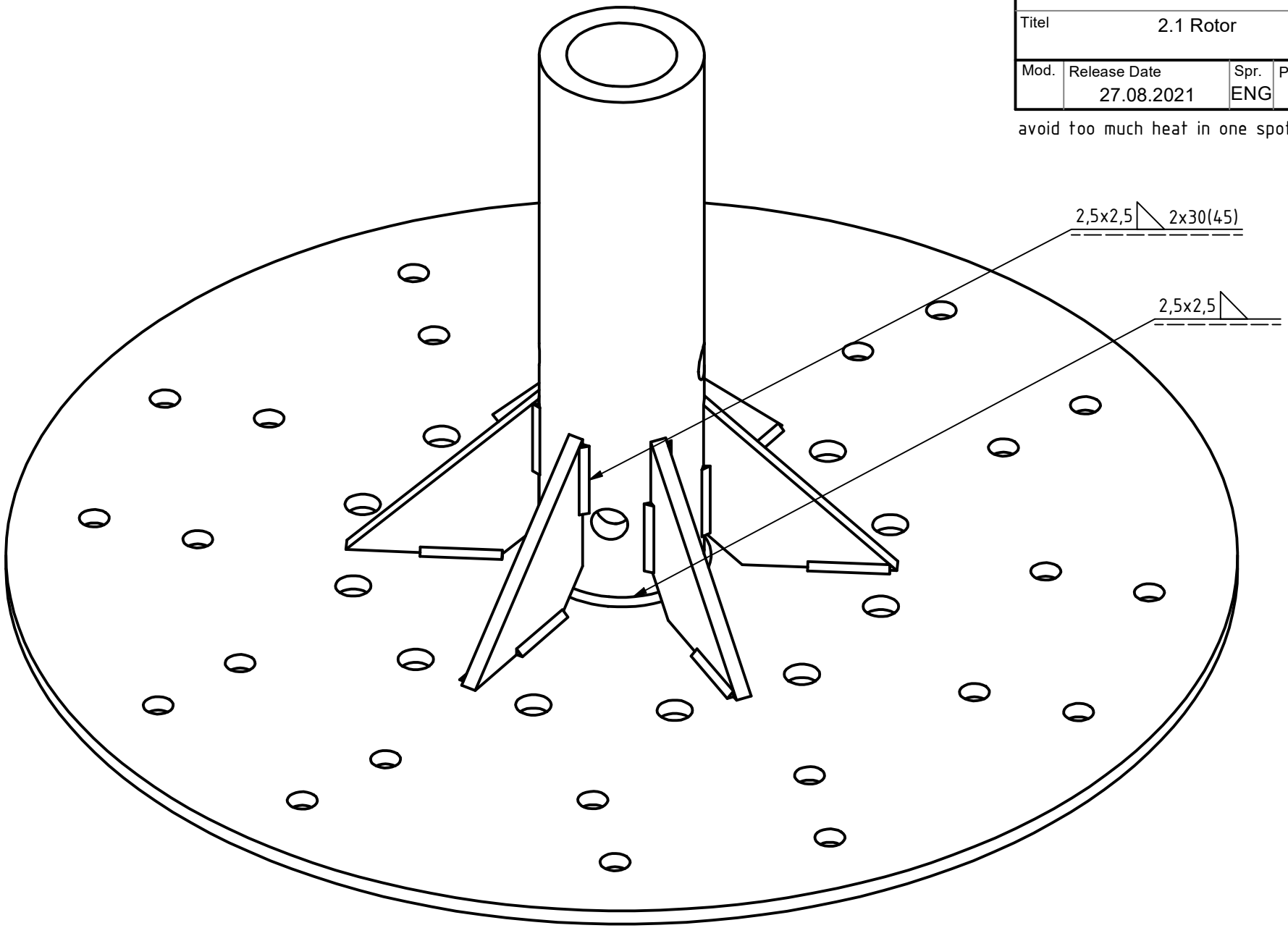

2.1-1 Plate 450x450x10

| Project | KUKATE34© | | |
|---|---|---|---|
| Titel | 2.1-1 Plate 450x450x10 | | |
| Mod. | Release Date 26.11.2021 | Spr. ENG | Page 1/1 |

Material: Steel

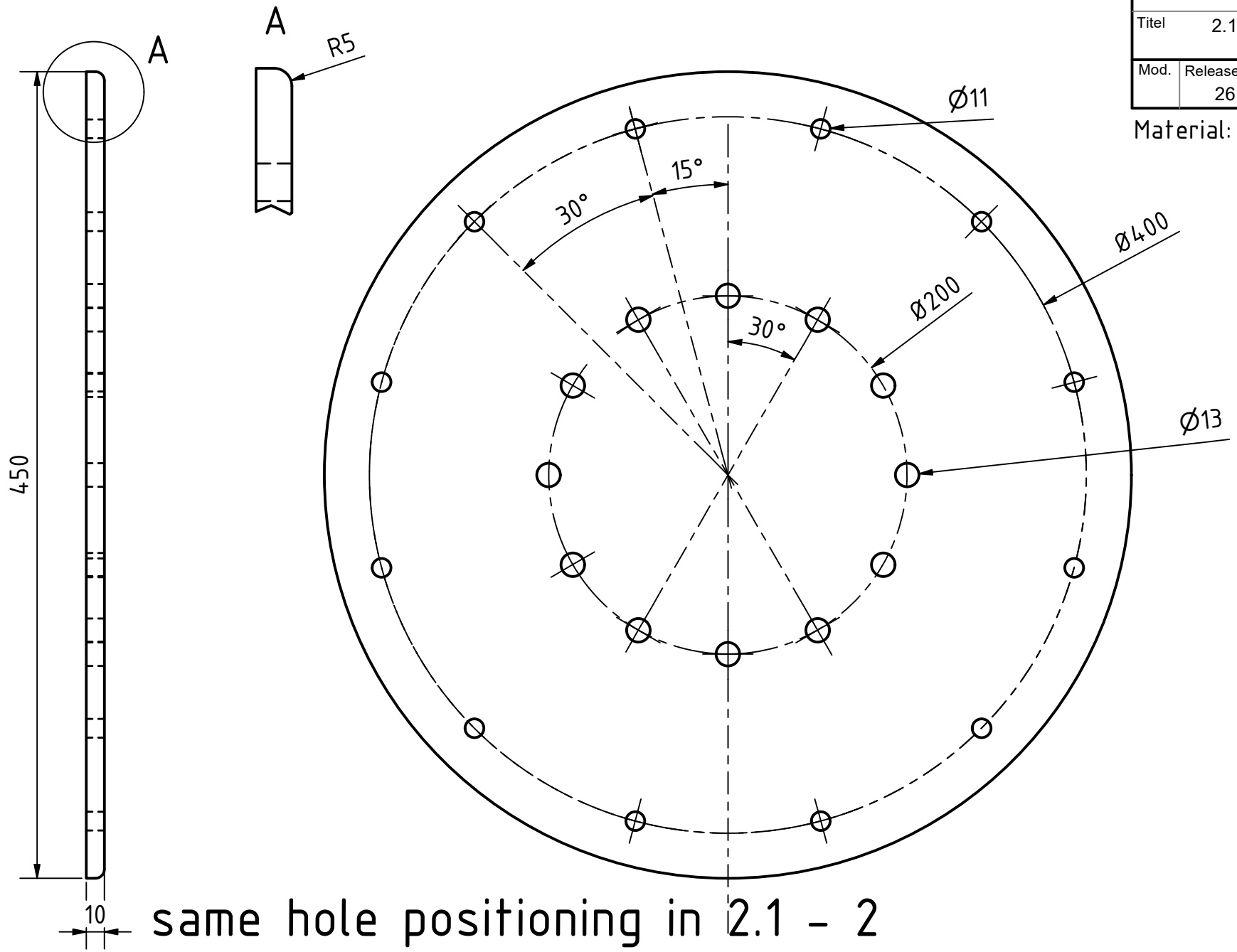


same hole positioning in 2.1 - 2

2.1-2 Plate 450x450x4

| Project | KUKATE34© | | |
|---|---|---|---|
| Titel | 2.1-2 Plate 450x450x4 | | |
| Mod. | Release Date 26.11.2021 | Spr. ENG | Page 1/1 |

Material: Steel

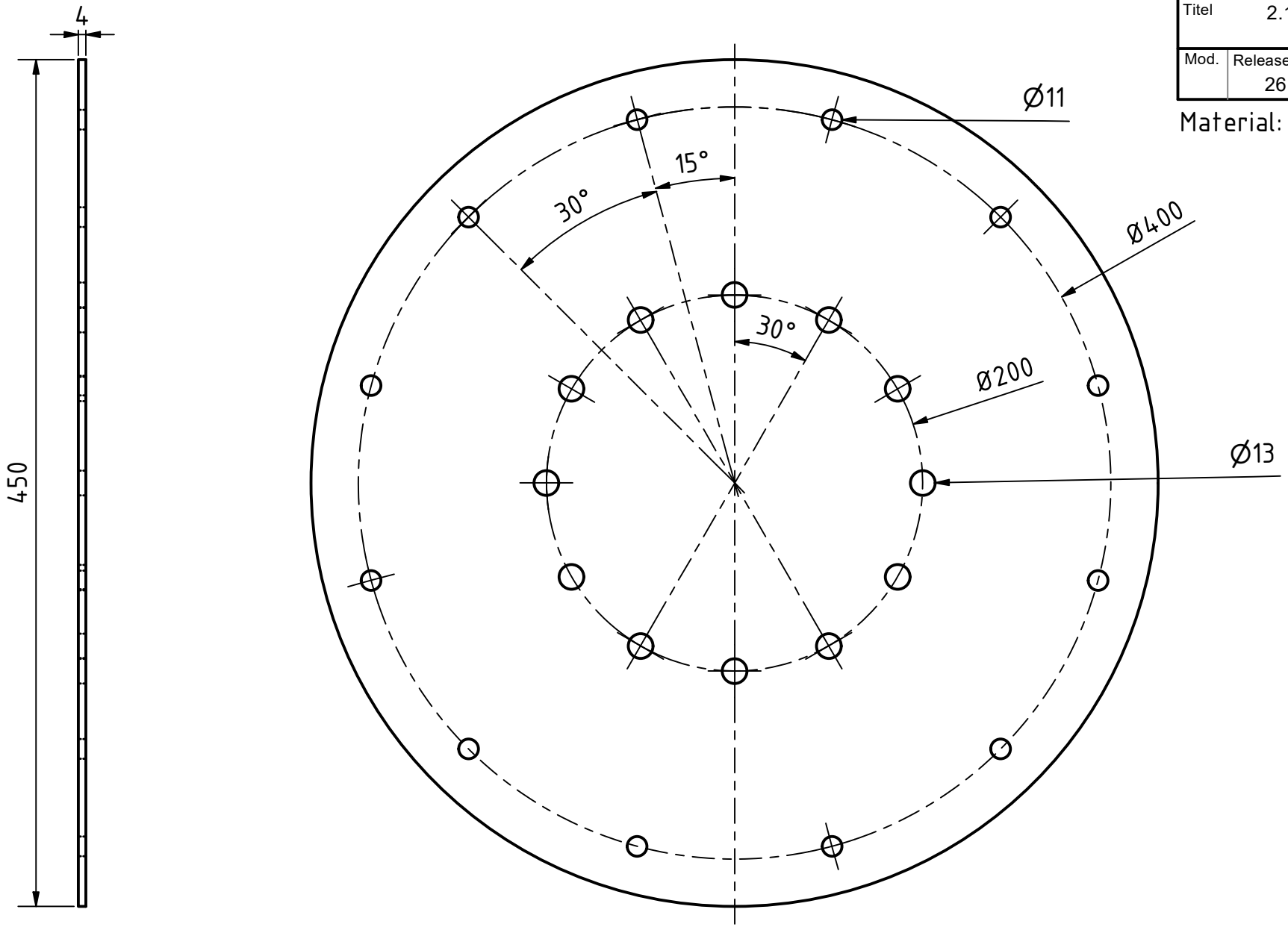


same hole positioning in 2.1 - 1

2.1-3Flat steel 100x40x6

| Project | KUKATE34© | | |
|---|---|---|---|
| Titel | 2.1-3 Flat steel 100x40x6 | | |
| Mod. | Release Date 18.09.2021 | Spr. ENG | Page 1/1 |

Material: Steel

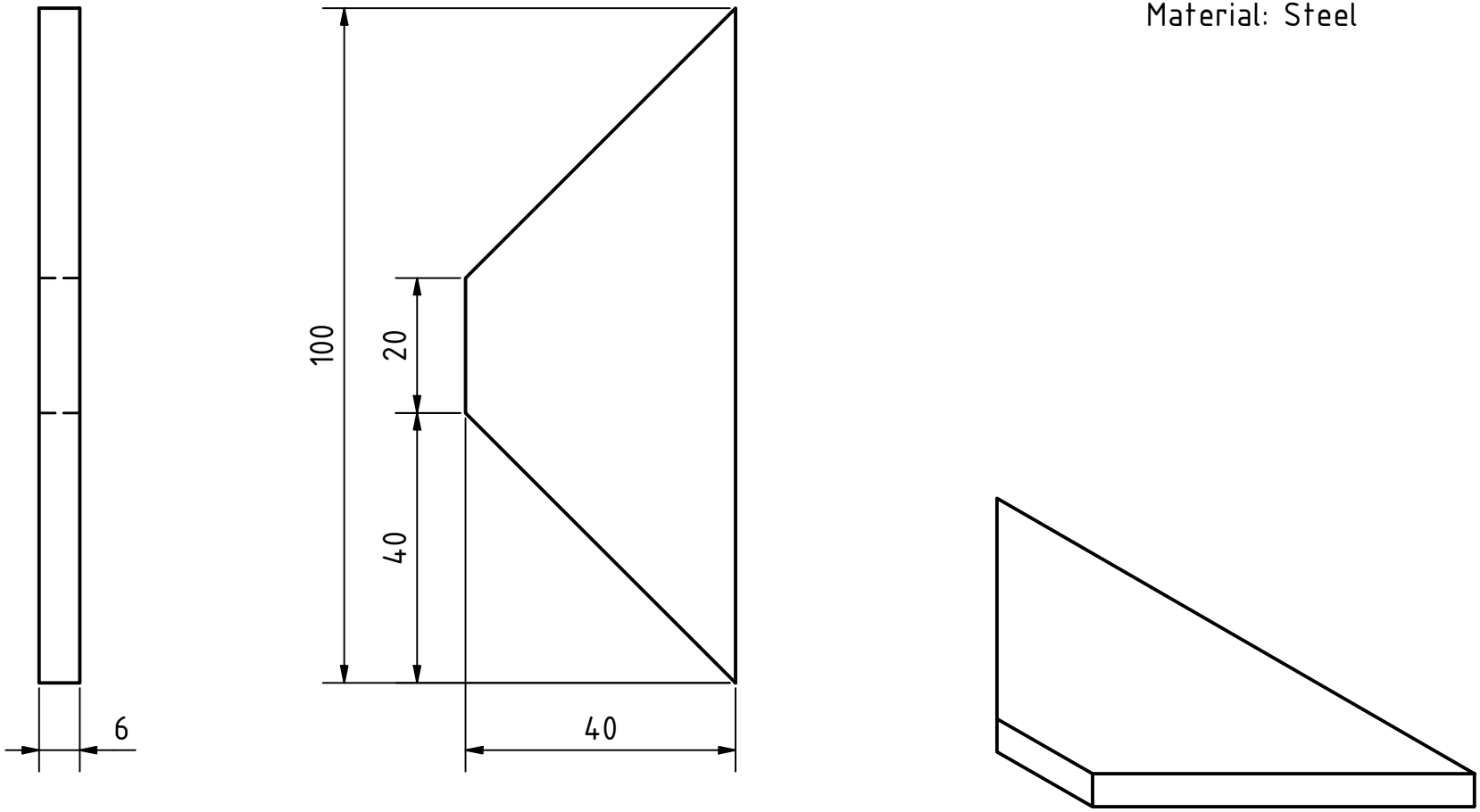

2.1-4 Pipe 33,7x4x1500

Material: Steel

| Project | KUKATE34© | | |
|---|---|---|---|
| Titel | 2.1-4 Pipe 33,7x4x1500 | | |
| Mod. | Release Date 21.09.2021 | Spr. ENG | Page 1/1 |

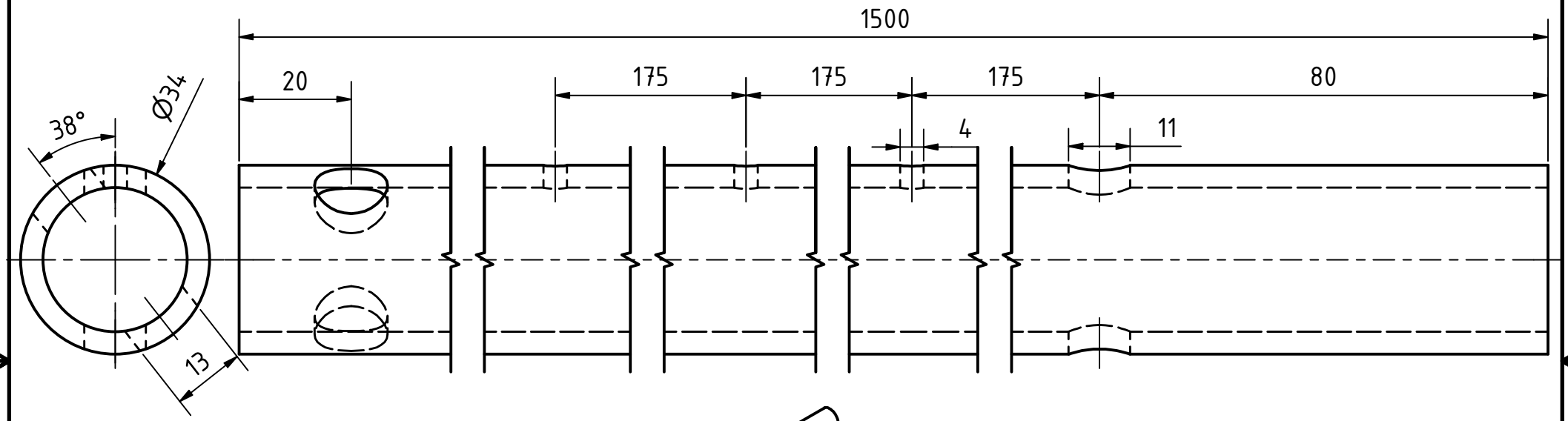


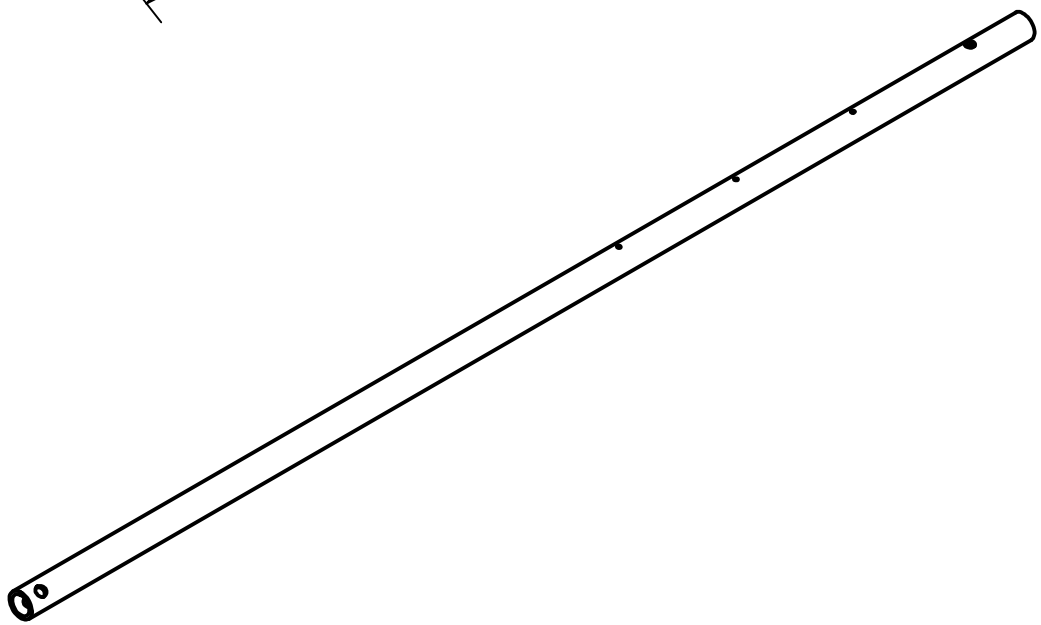

Holes are Drilled with 2.1-4

2.1-5 Sheet 1000x370x2

Material: Steel

| Project | KUKATE34© | | |
|---|---|---|---|
| Titel | 2.1-5 Sheet 1000x370x2 | | |
| Mod. | Release Date 21.09.2021 | Spr. ENG | Page 1/1 |

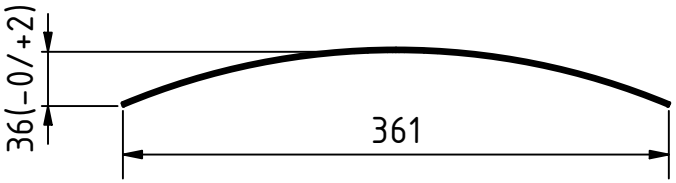


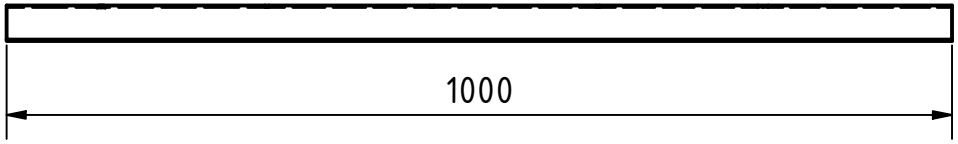


Sheet Dimension before bending 370x1000x2mm
Drill holes with 2.1-4

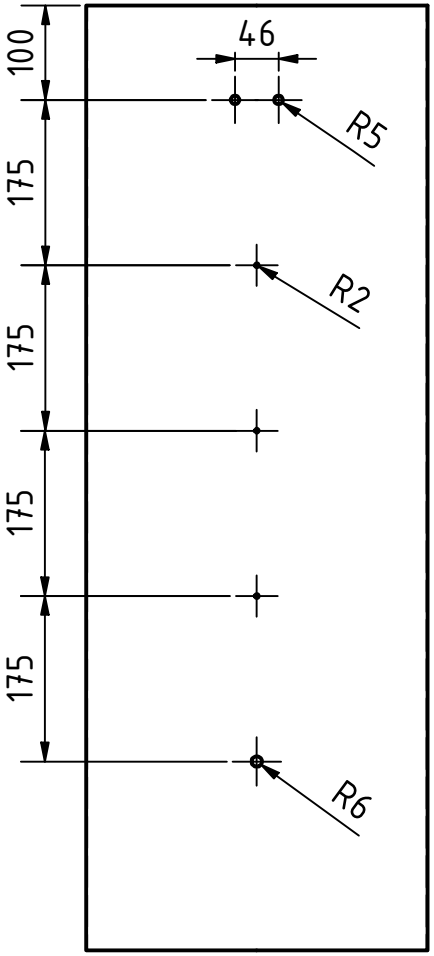


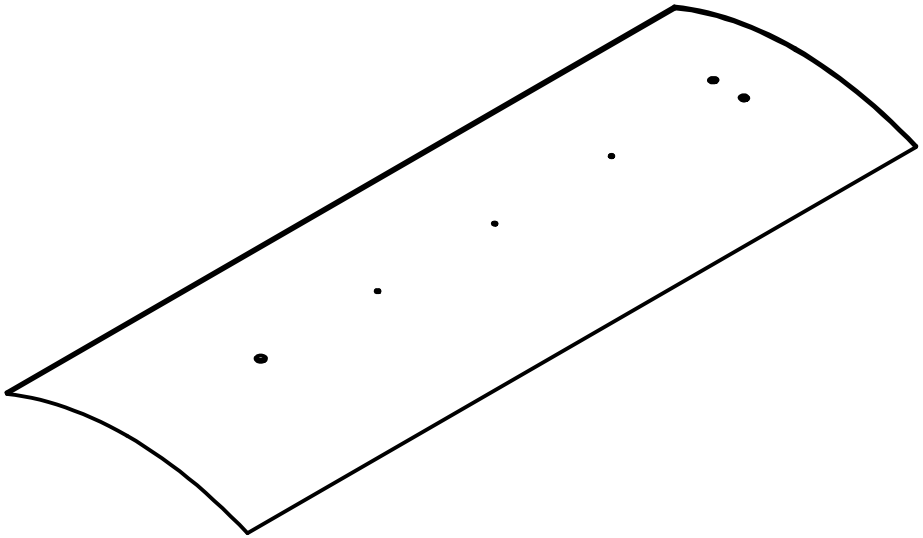

2.1-6 Flat steel 330x20x5

| Project | KUKATE34© | | |
|---|---|---|---|
| Titel | 2.1-6 Flat steel 330x20x5 | | |
| Mod. | Release Date 12.08.2021 | Spr. ENG | Page 1/1 |

Material: Steel

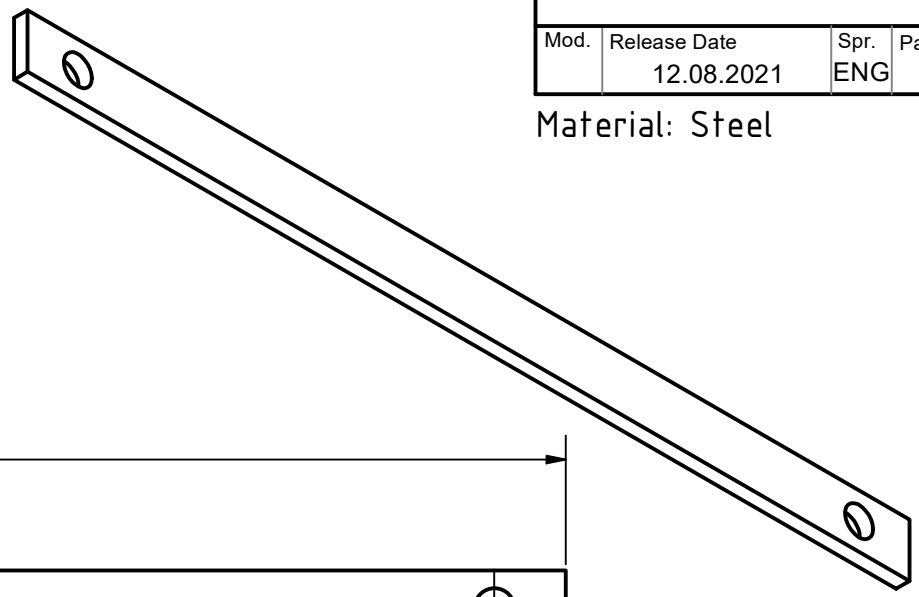

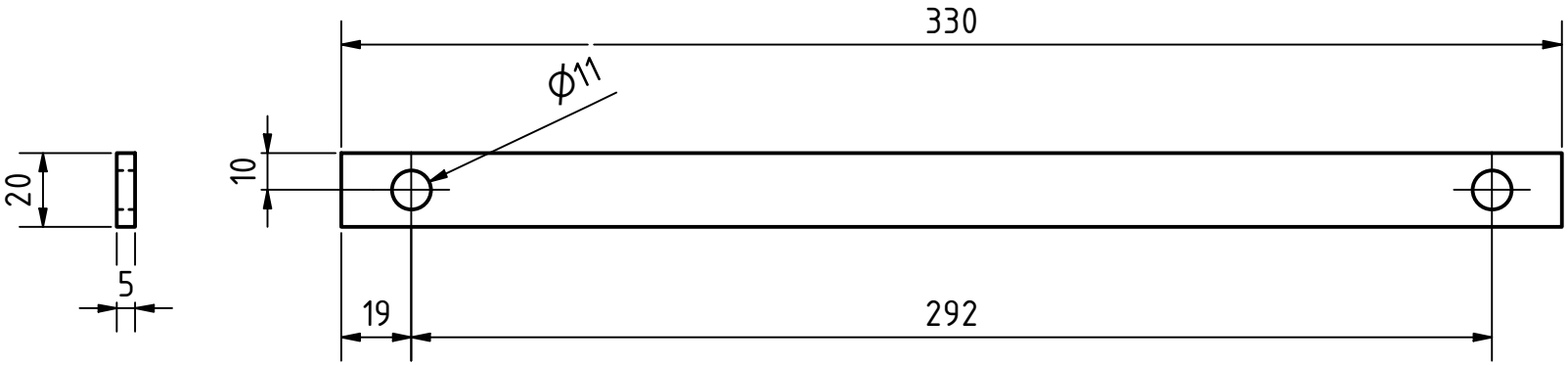

2.1-6 Pipe 60,3x10x224

Material: Steel

| Project | KUKATE34© | | |
|---|---|---|---|
| Titel | 2.1-6 Pipe 60,3x10x224 | | |
| Mod. | Release Date 29.11.2021 | Spr. ENG | Page 1/1 |

Holes drilled together with 2.3.1 - 4

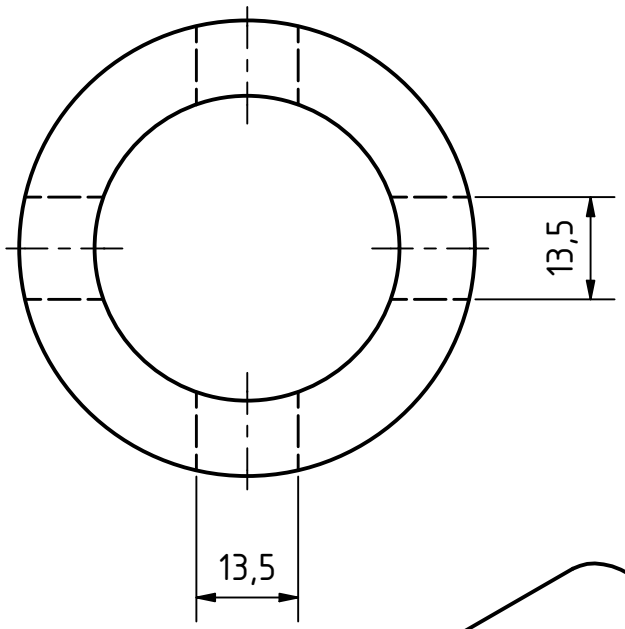


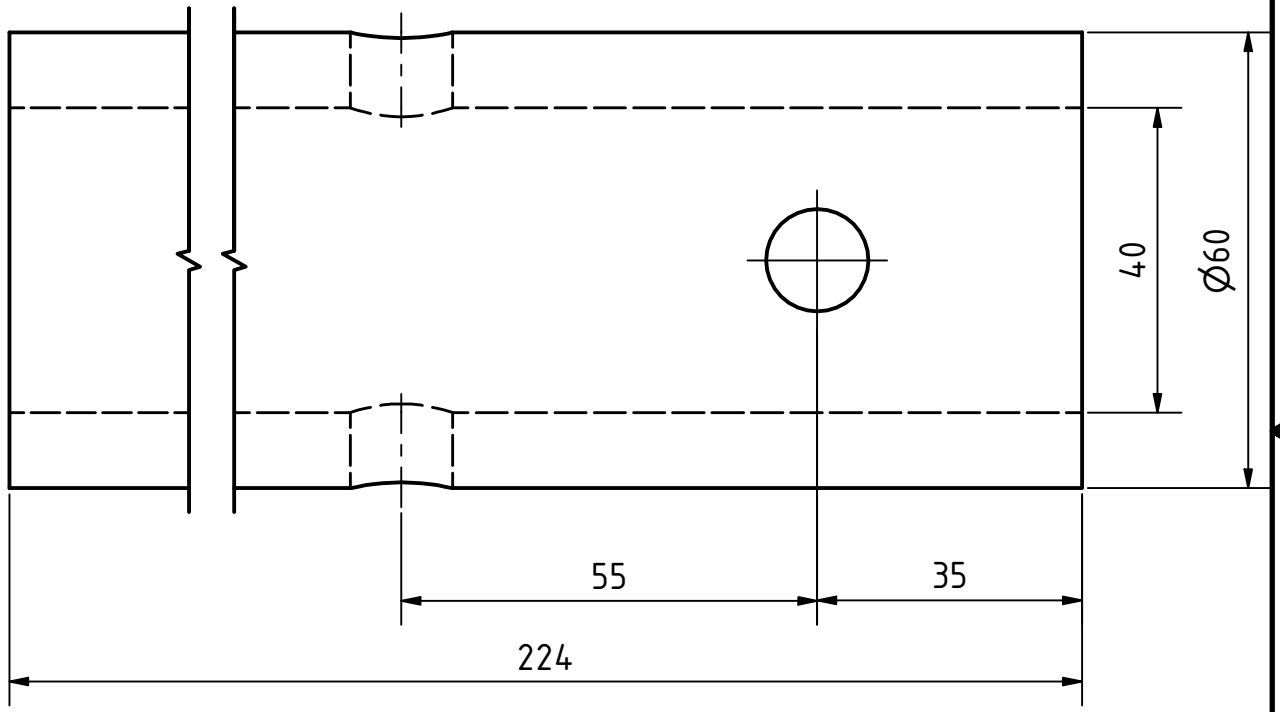


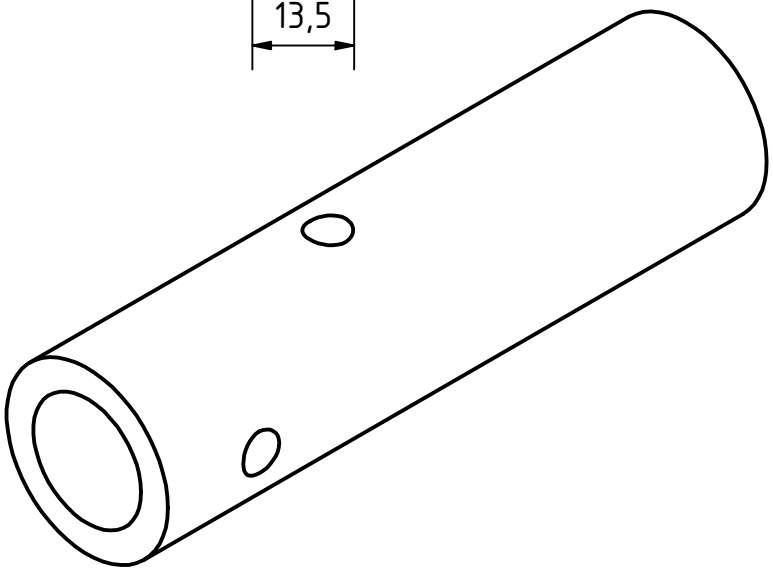

2.1-8 Flat steel 70x20x5

| Project | KUKATE34© | | |
|---|---|---|---|
| Titel | 2.1-8 Flat steel 70x20x5 | | |
| Mod. | Release Date 21.09.2021 | Spr. ENG | Page 1/1 |

Material: Steel

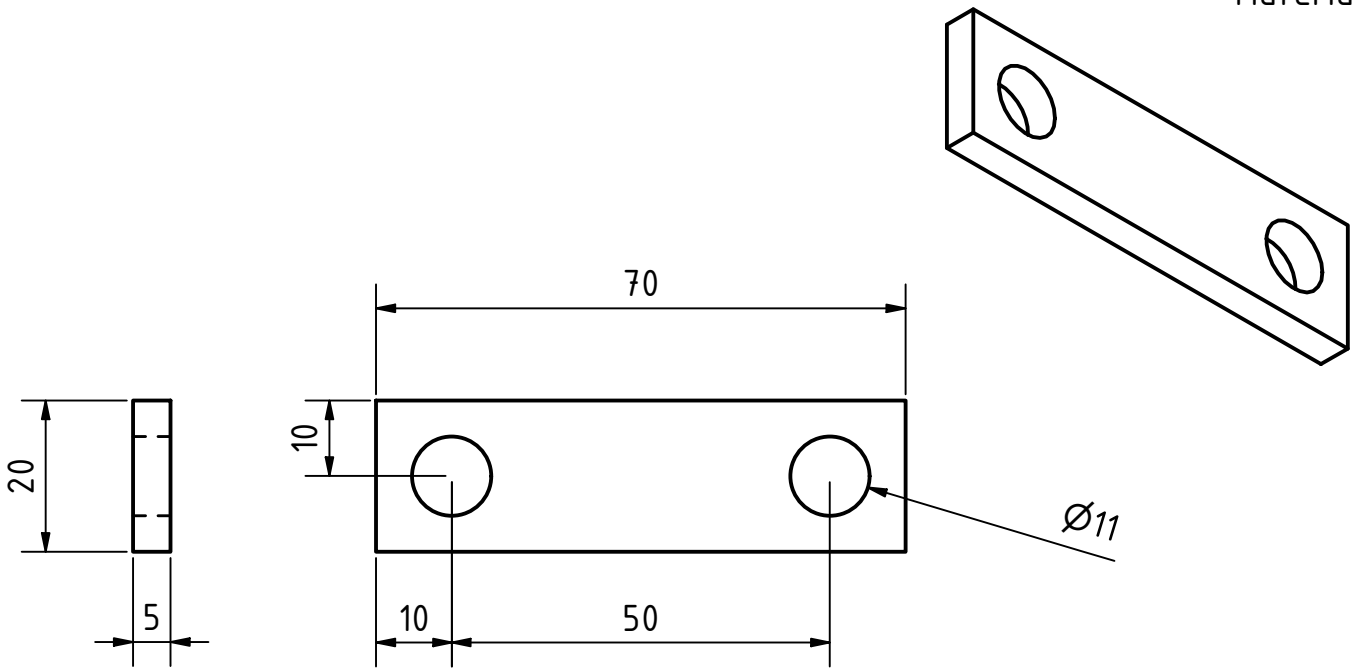

2.1-9 Pipe

| Project | KUKATE34© | | |
|---|---|---|---|
| Titel | 2.1-9 Pipe | | |
| Mod. | Release Date 17.05.2020 | Spr. ENG | Page 1/1 |

Material: Aluminium

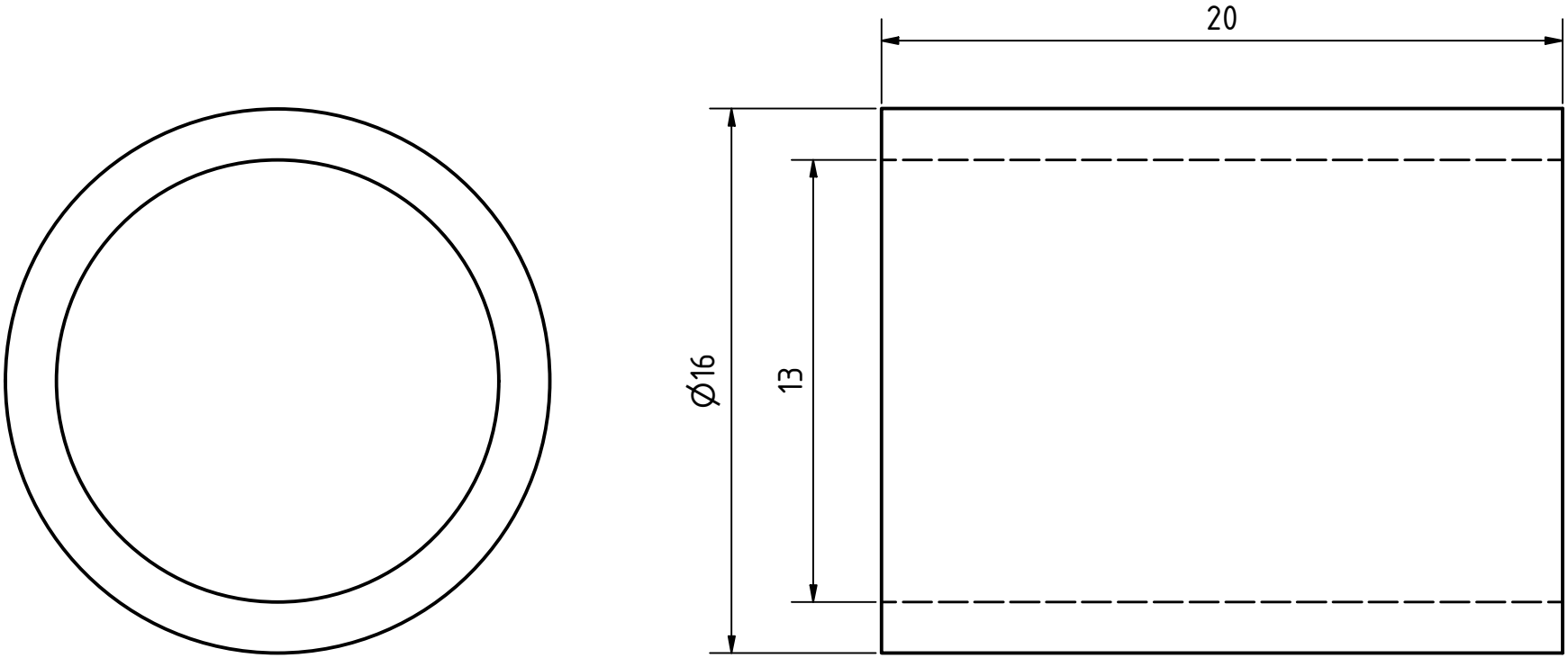

# 2.2.1 Narcelle view 1

| Project | KUKATE34© | | |
|---|---|---|---|
| Titel | 2.2.1 Nacelle frame 1 | | |
| Mod. | Release Date 20.11.2021 | Spr. ENG | Page 1/1 |

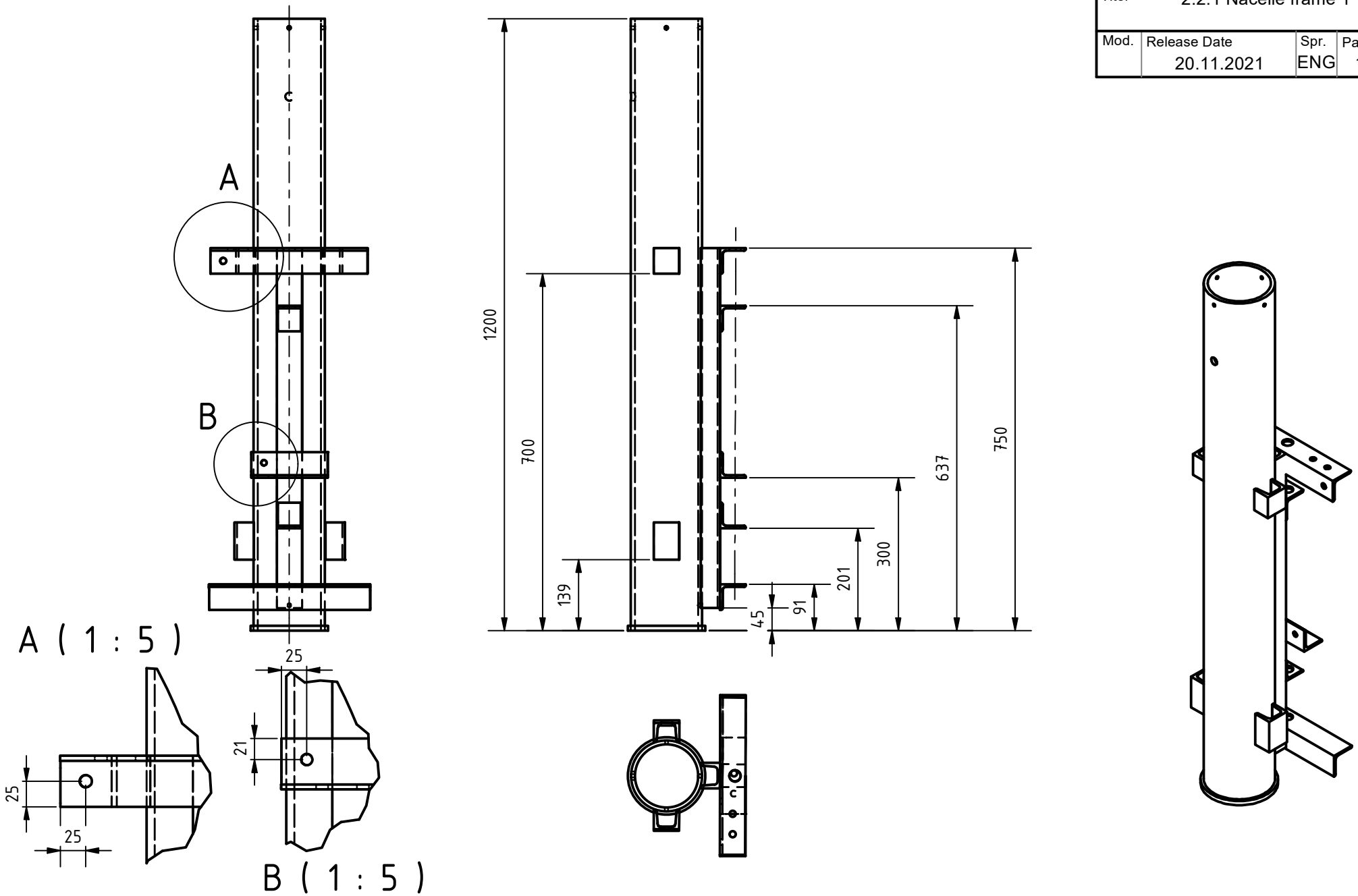

# 2.2.1 Narcelle view 2

| | | | |
|---|---|---|---|
| Project | KUKATE34© | | |
| Titel | 2.2.1 Nacelle frame 2 | | |
| Mod. | Release Date 20.11.2021 | Spr. ENG | Page 1/1 |

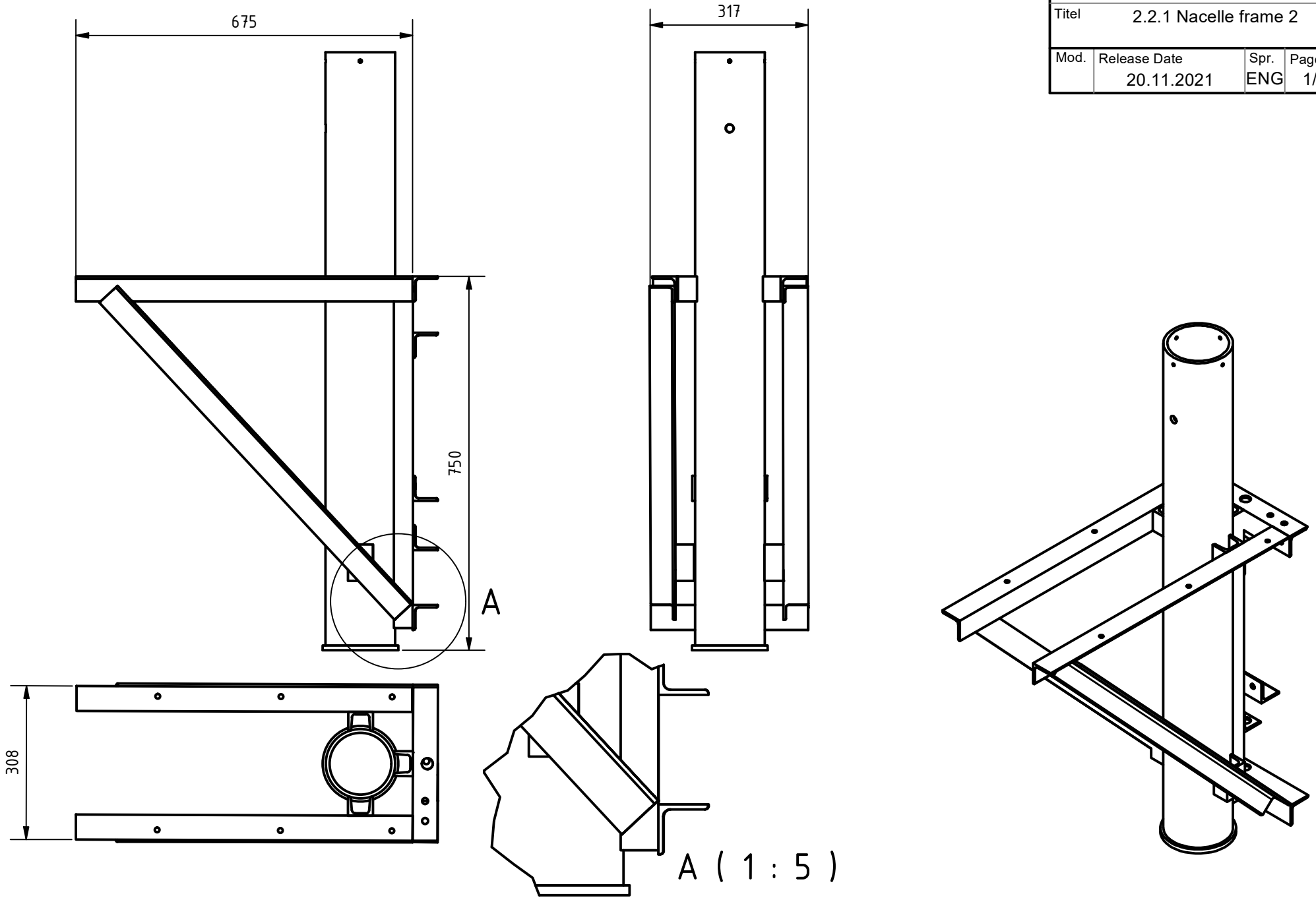

# 2.2.1 Narcelle view 3

| Project | KUKATE34© | | |
|---|---|---|---|
| Titel | 2.2.1 Nacelle frame 3 | | |
| Mod. | Release Date 20.11.2021 | Spr. ENG | Page 1/1 |

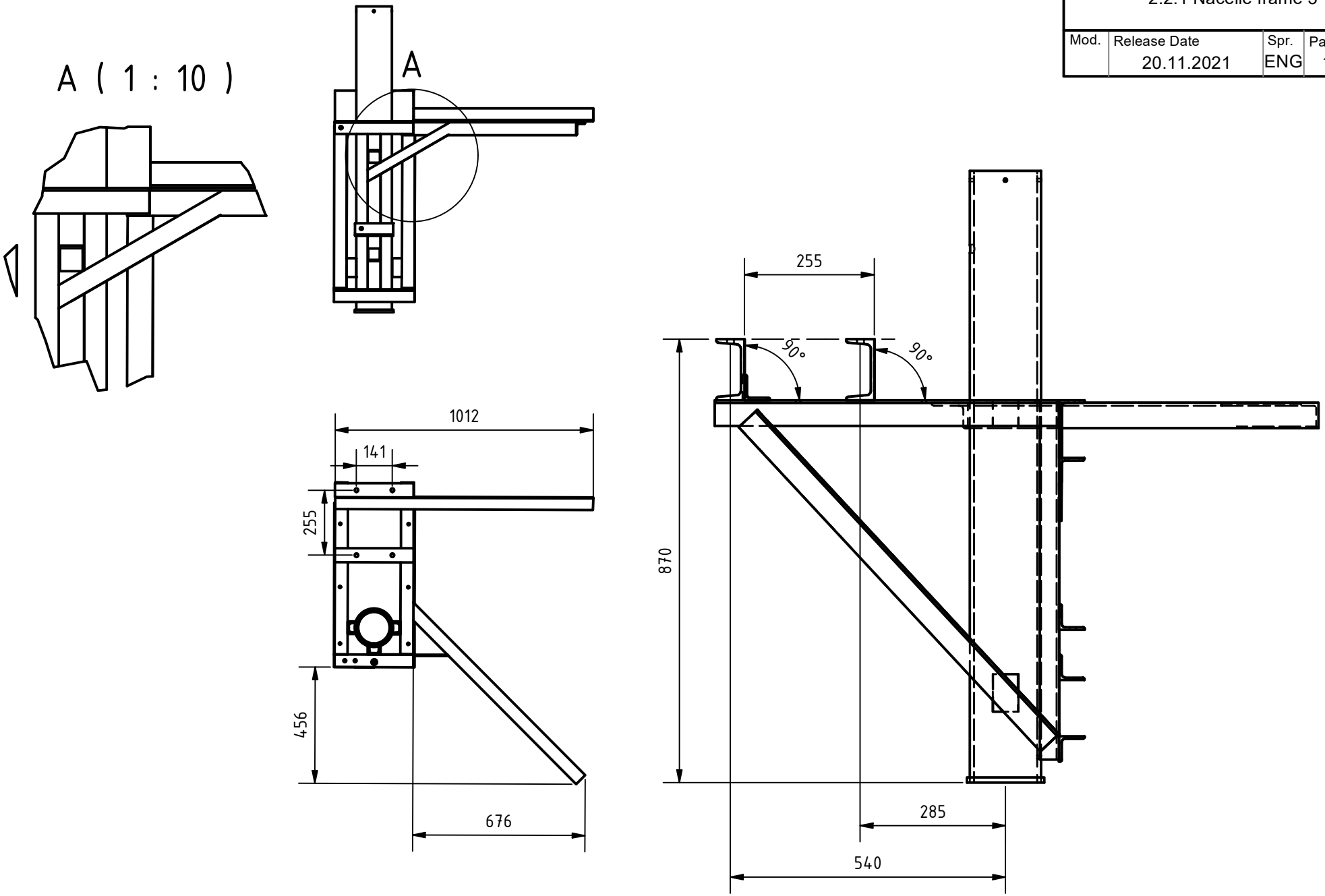

| | |
|---|---|
| Project | KUKATE34© |
| Titel | 2.2.1 Nacelle frame |

| Mod. | Release Date | Spr. | Page |
|---|---|---|---|
| | 29.09.2021 | ENG | 1/1 |

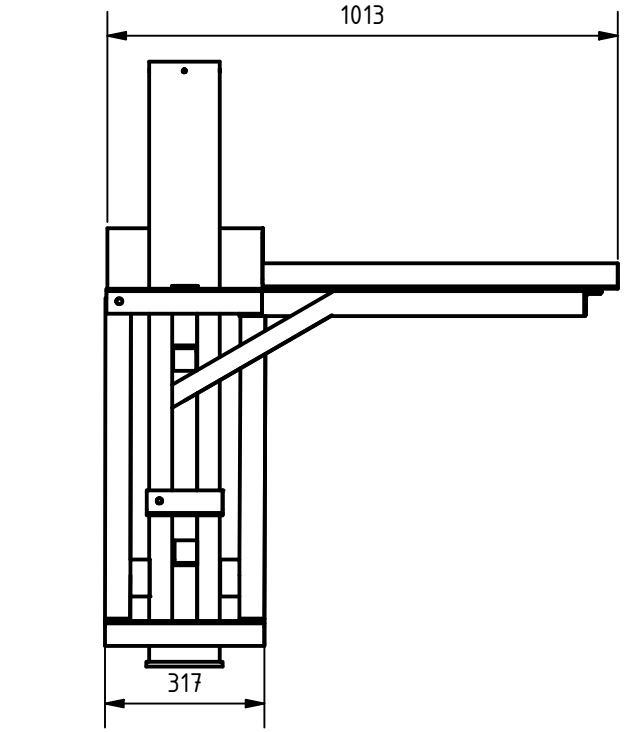


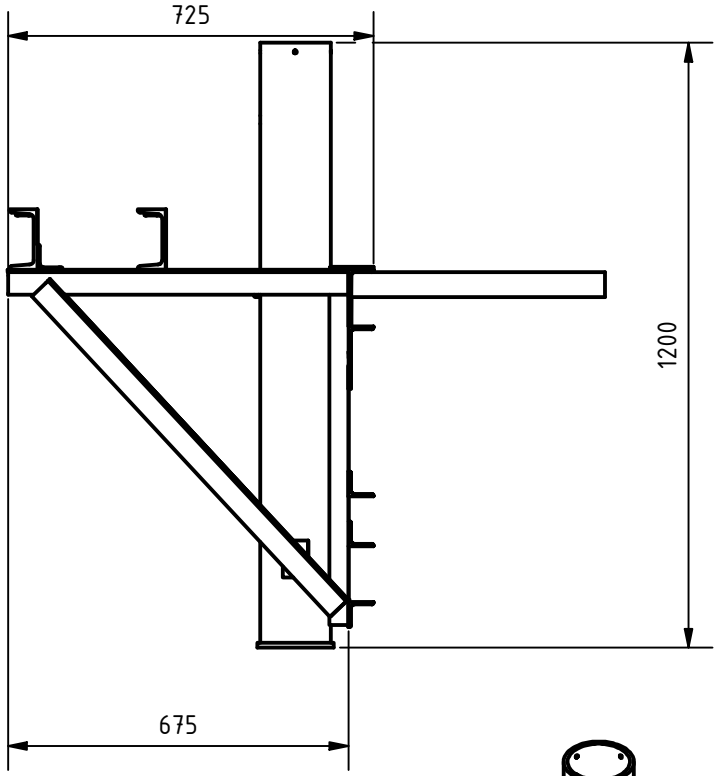


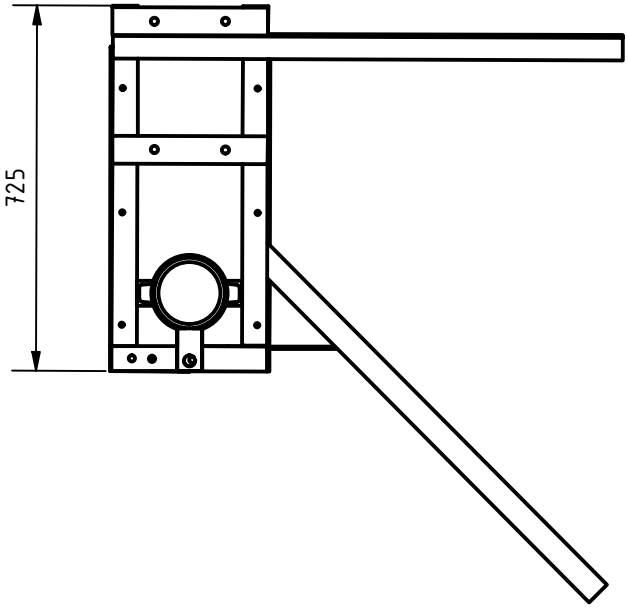


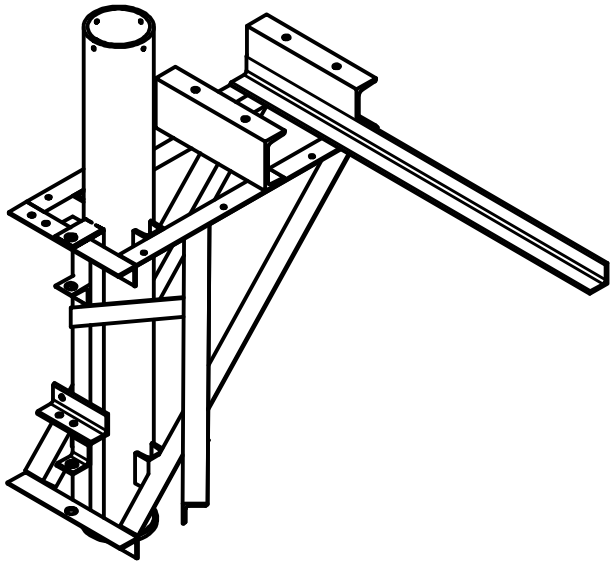

2.2.1-1 Pipe 139,7x8x1200

| Project | KUKATE34© | | |
|---|---|---|---|
| Titel | 2.2.1-1 Pipe 139,7x8x1200 | | |
| Mod. | Release Date 21.07.2020 | Spr. ENG | Page 1/1 |

Material: Steel

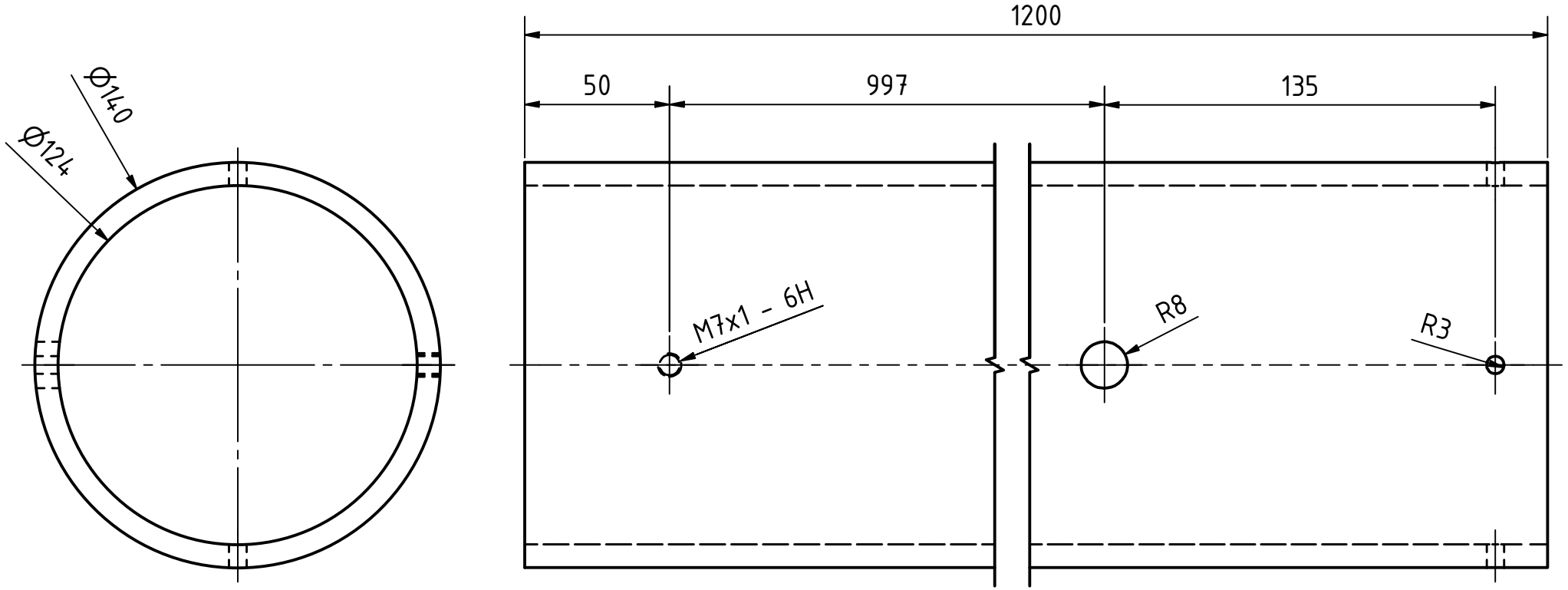

2.2.1-2 U-Profile 120x309

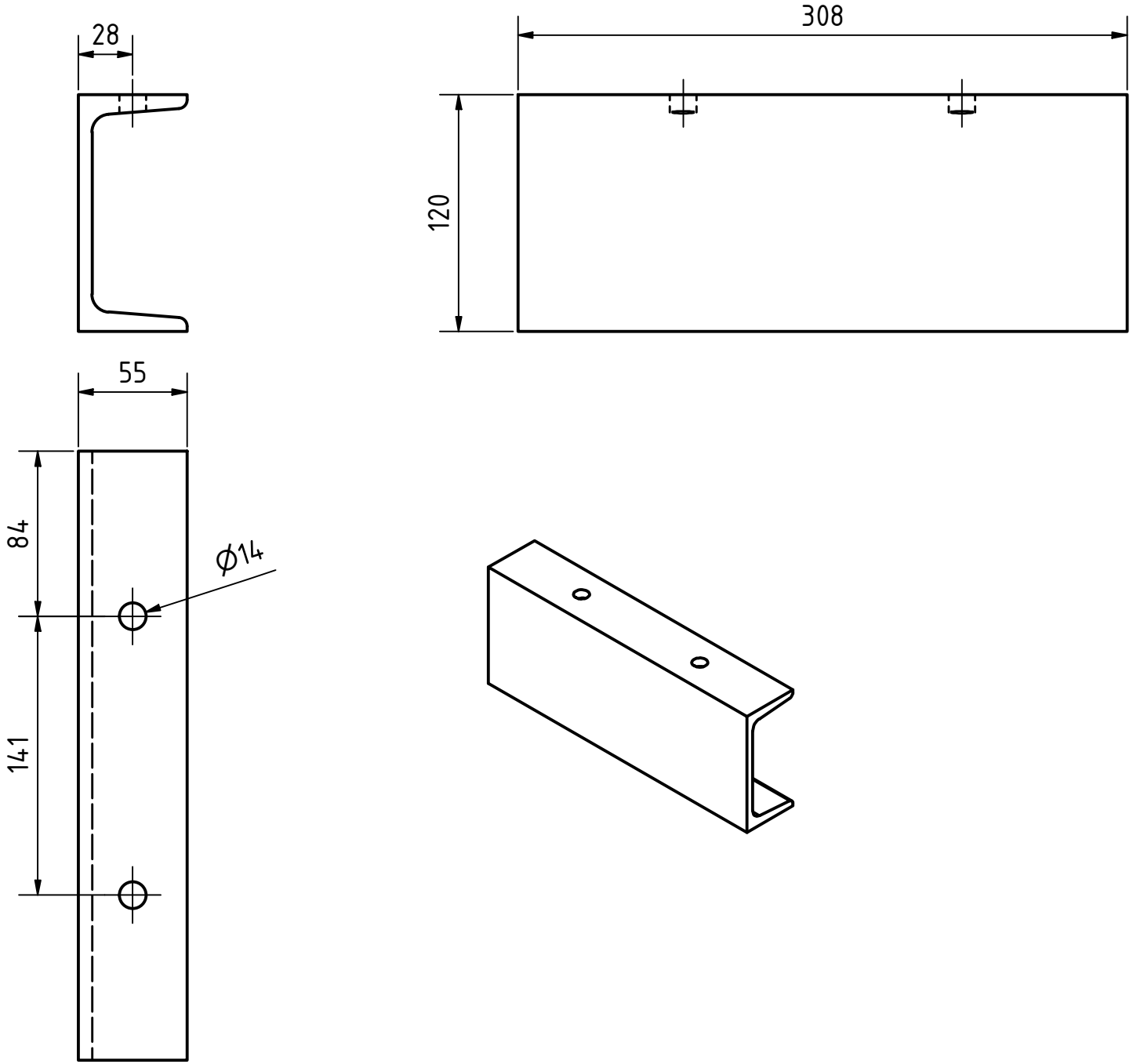


| Project | KUKATE34© | | |
|---|---|---|---|
| Titel | 2.2.1-2 U-Profile 120x309 | | |
| Mod. | Release Date 21.07.2020 | Spr. ENG | Page 1/1 |

Material: Steel

2.2.1-3 U-Profile U50x705

| Project | KUKATE34© | | |
|---|---|---|---|
| Titel | 2.2.1-3 U-Profile U50x705 | | |
| Mod. | Release Date 21.07.2020 | Spr. ENG | Page 1/1 |

Material: Steel

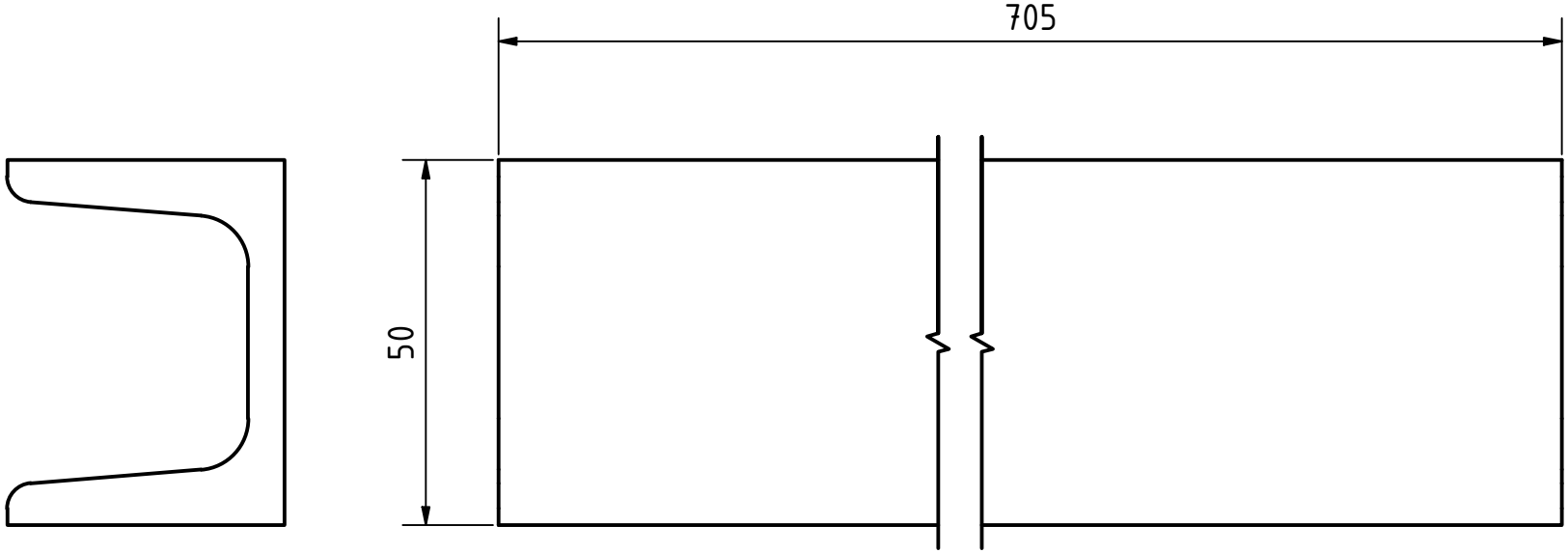

2.2.1-4 U-Profile U50x50

| | | | |
|---|---|---|---|
| Project | KUKATE34© | | |
| Titel | 2.2.1-4 U-Profile U50x50 | | |
| Mod. | Release Date 21.07.2020 | Spr. ENG | Page 1/1 |

Material: Steel

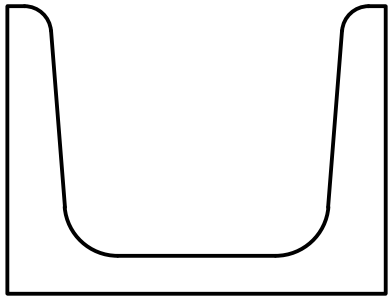

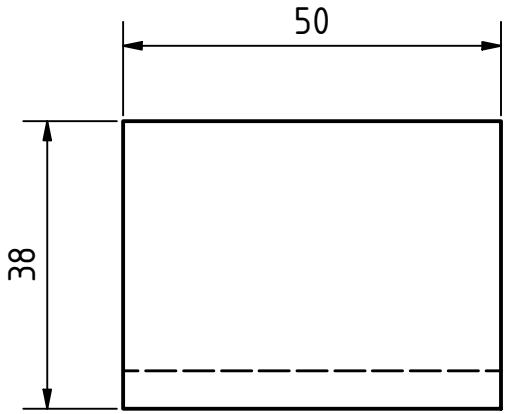


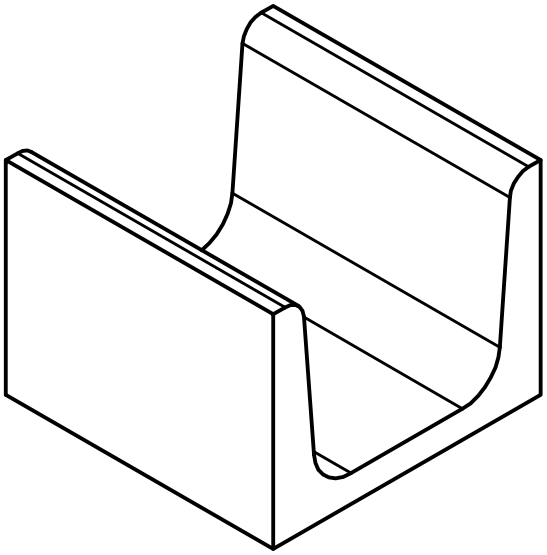

2.2.1-5 U-Profile U50x74

| Project | KUKATE34© | | |
|---|---|---|---|
| Titel | 2.2.1-5 U-Profile U50x74 | | |
| Mod. | Release Date 21.07.2020 | Spr. ENG | Page 1/1 |

Material: Steel

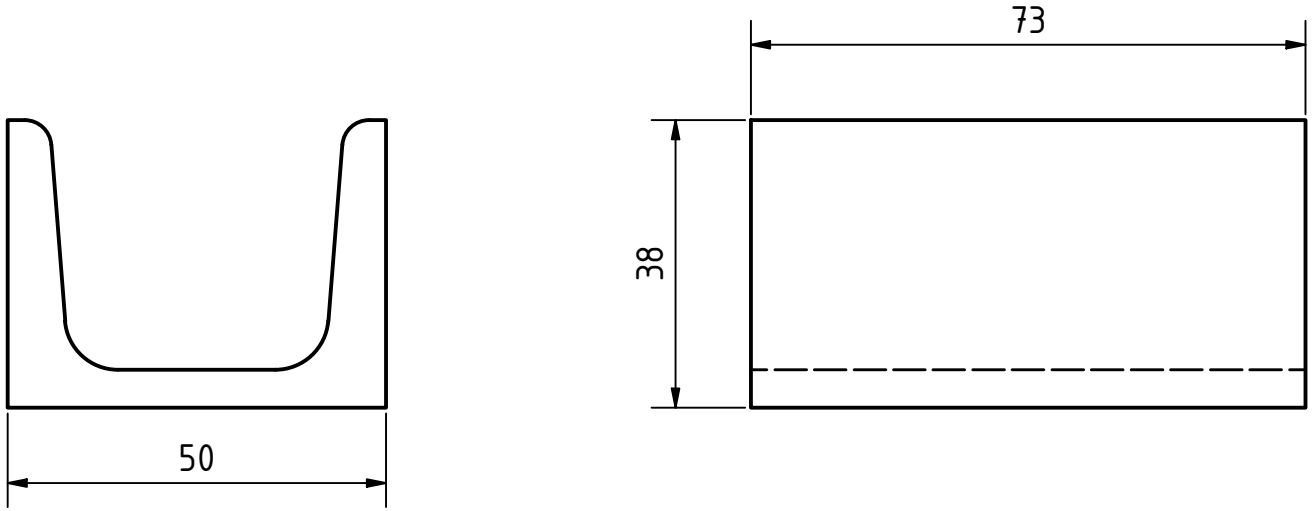

2.2.1-6 L-Profile 50x50x5x674

| Project | KUKATE34© | | |
|---|---|---|---|
| Titel | 2.2.1-6 L-Profile 50x50x5x674 | | |
| Mod. | Release Date 21.07.2020 | Spr. ENG | Page 1/1 |

Material: Steel

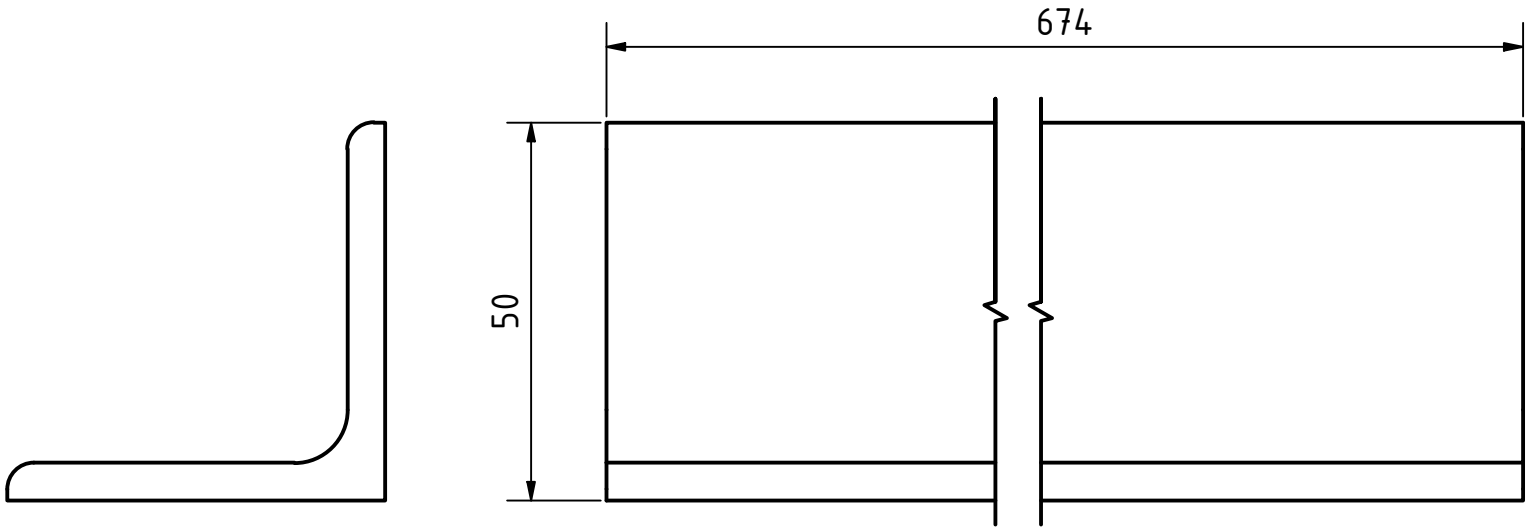

2.2.1-7 L-Profile 50x50x5x309

Material: Steel

| Project | KUKATE34© | | |
|---|---|---|---|
| Titel | 2.2.1-7 L-Profile 50x50x5x309 | | |
| Mod. | Release Date 21.07.2020 | Spr. ENG | Page 1/1 |

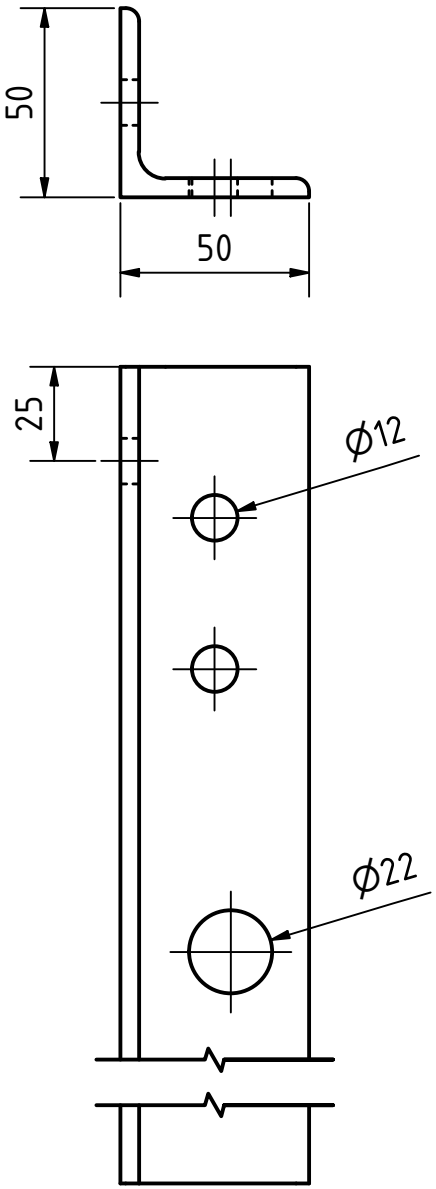


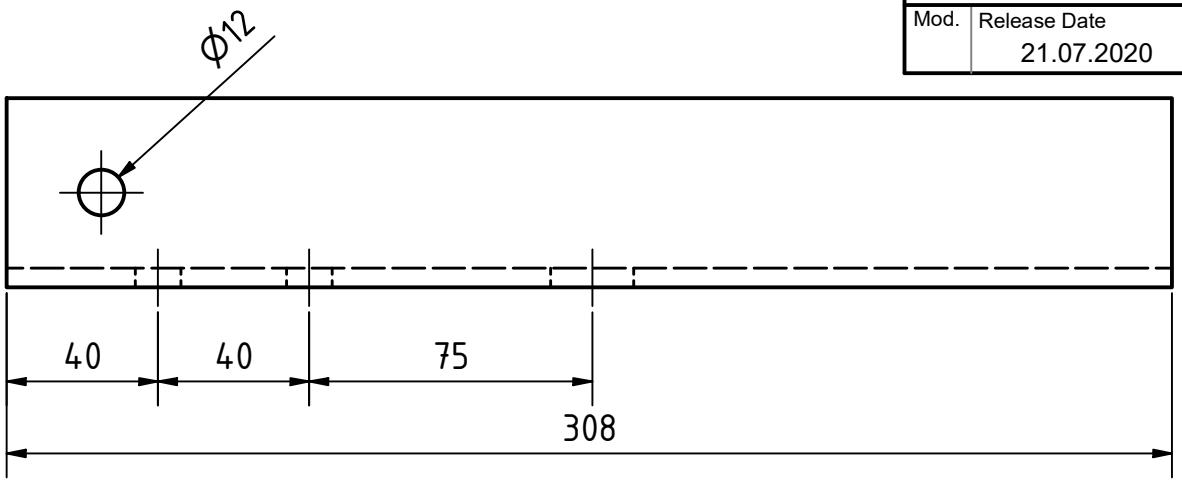

2.2.1-8 L-Profile 50x50x5x869

| Project | KUKATE34© | | |
|---|---|---|---|
| Titel | 2.2.1-8 L-Profile 50x50x5x869 | | |
| Mod. | Release Date 21.07.2020 | Spr. ENG | Page 1/1 |

Material: Steel

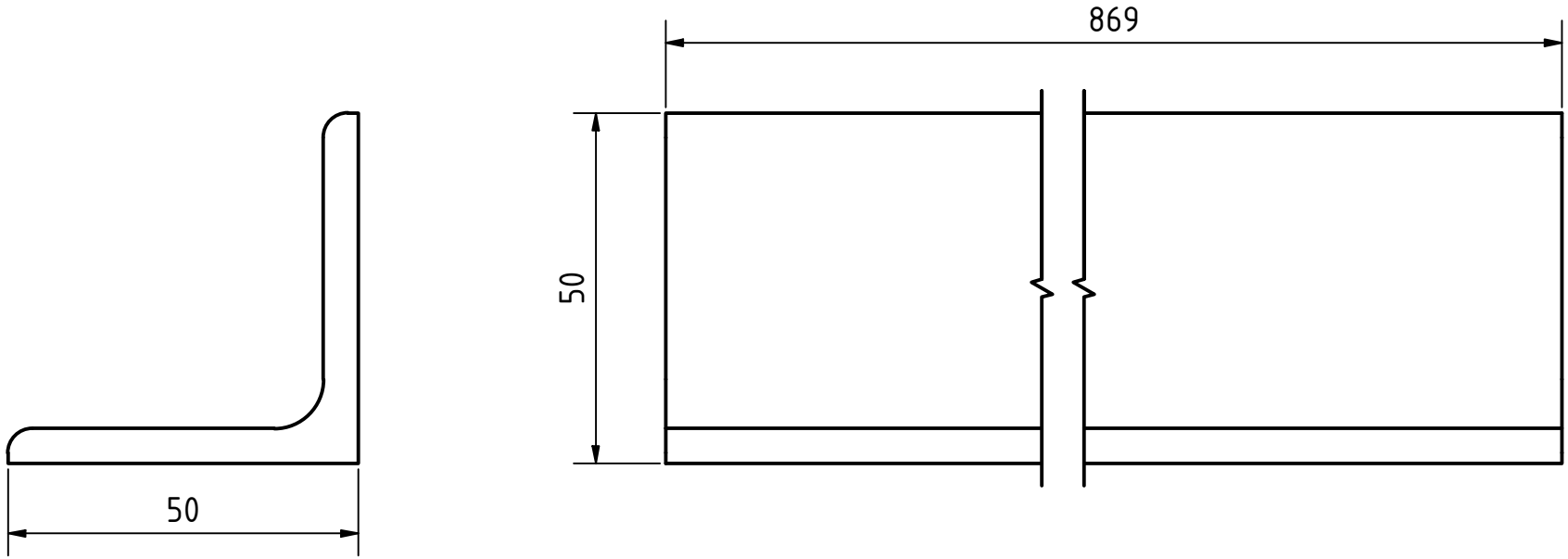

2.2.1-10 L-Profile 50x50x5x45

| Project | KUKATE34© | | |
|---|---|---|---|
| Titel | 2.2.1-10 L-Profile 50x50x5x45 | | |
| Mod. | Release Date 21.07.2020 | Spr. ENG | Page 1/1 |

Material: Steel

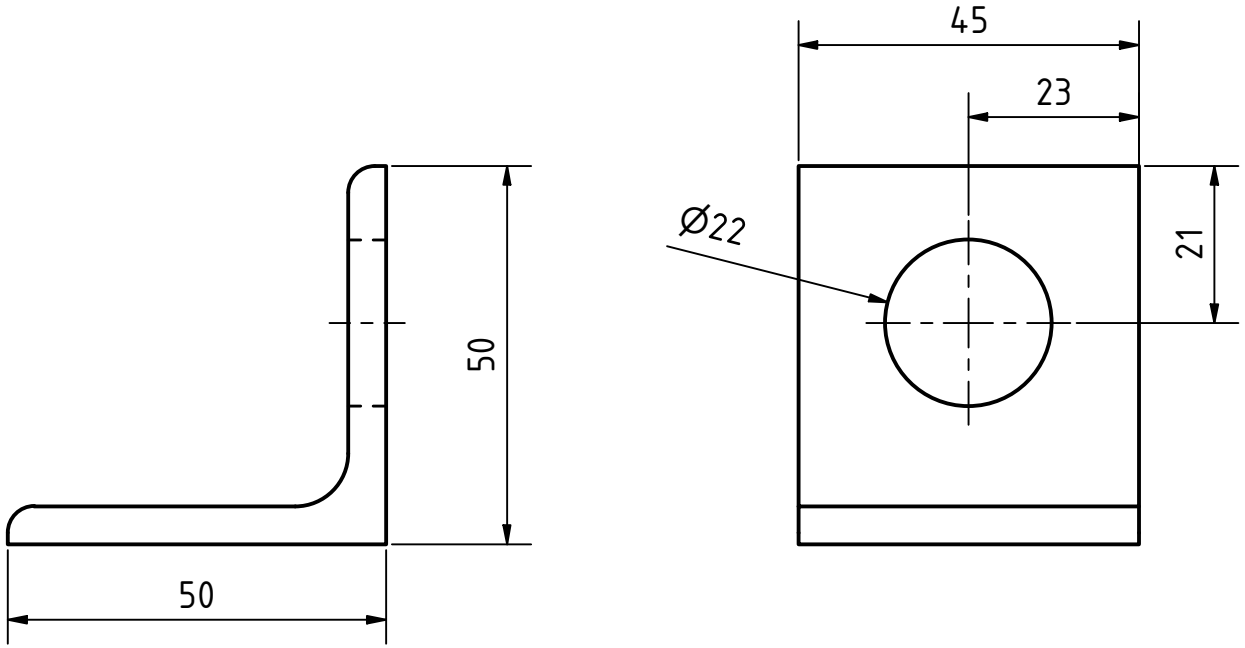


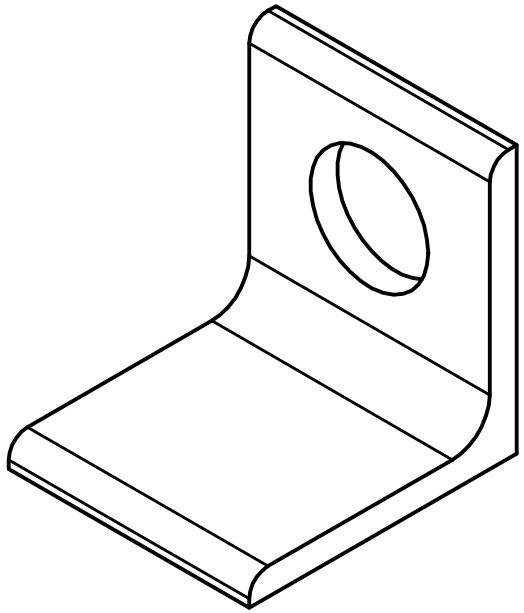

2.2.1-11 L-Profile 50x50x5x150

| Project | KUKATE34© | | |
|---|---|---|---|
| Titel | 2.2.1-11 L-Profile 50x50x5x150 | | |
| Mod. | Release Date 21.07.2020 | Spr. ENG | Page 1/1 |

Material: Steel

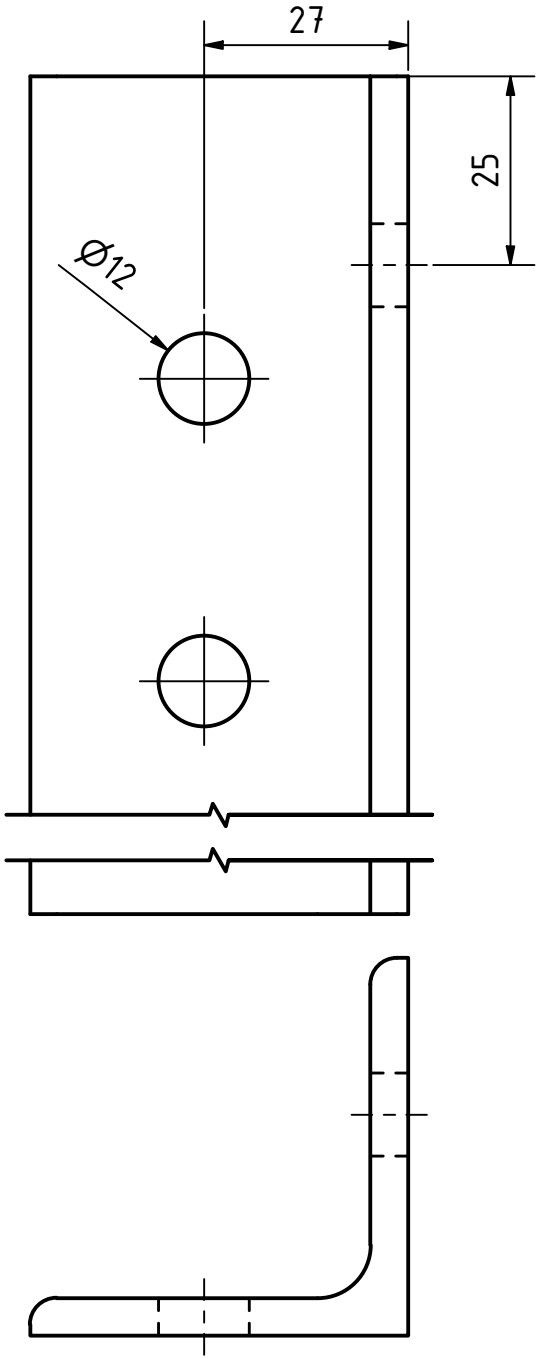


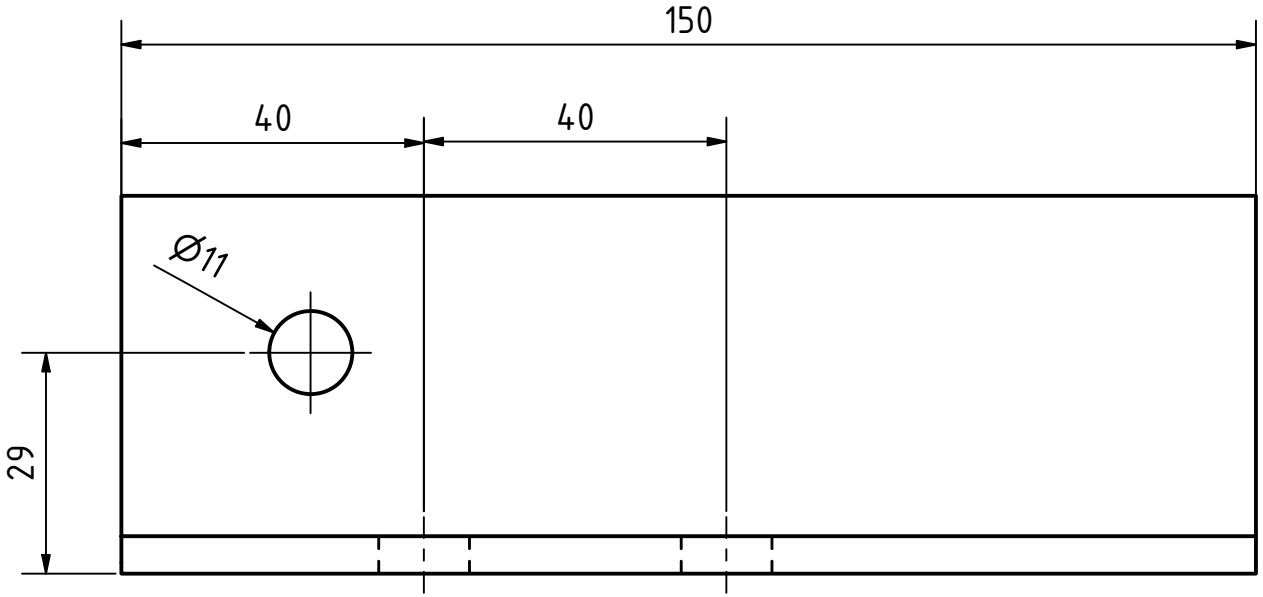

2.2.1 - 18 Flat steel 6x50x85mm

| Project | KUKATE34© | | |
|---|---|---|---|
| Titel | 2.2.1 - 18 Flat steel 6x50x85mm | | |
| Mod. | Release Date 21.09.2021 | Spr. ENG | Page 1/1 |

Material: Steel

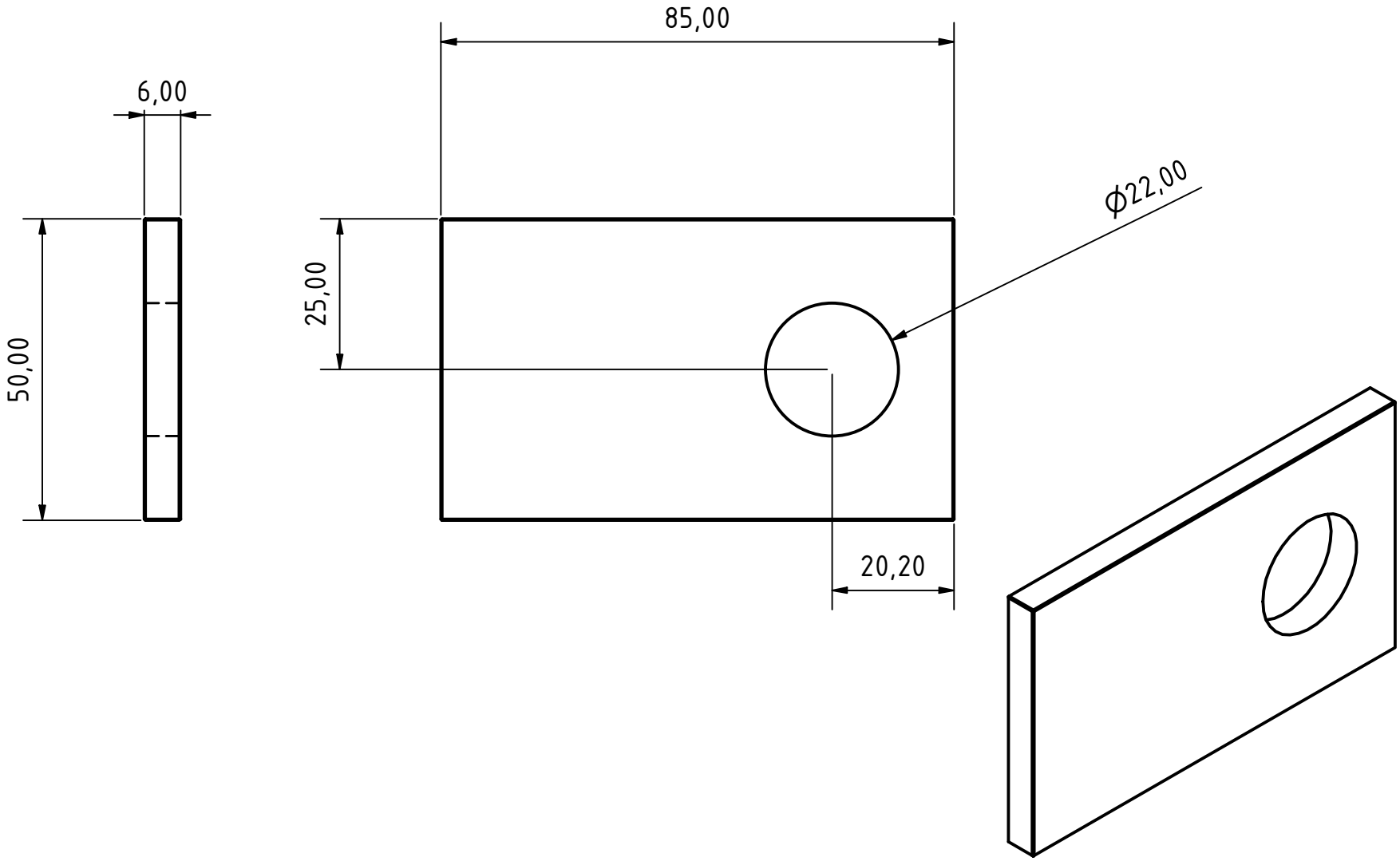

# 2.2.2 Wooden bearing cover

| Project | KUKATE34© | | |
|---|---|---|---|
| Titel | 2.2.2 Wooden bearing cover | | |
| Mod. | Release Date 21.07.2020 | Spr. ENG | Page 1/1 |

Note:
Grain should be shifted 90° to each other

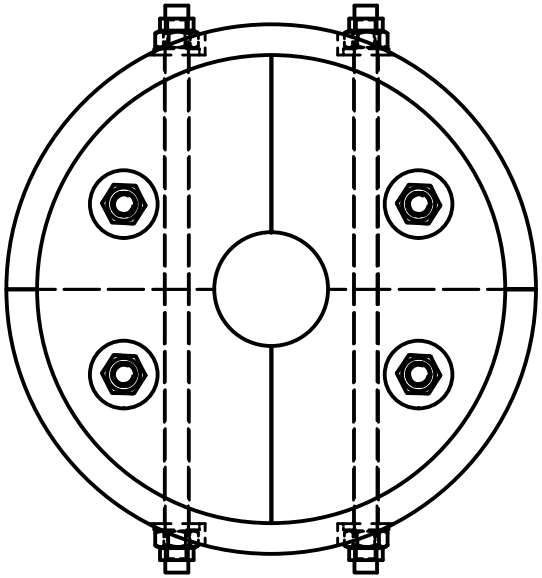

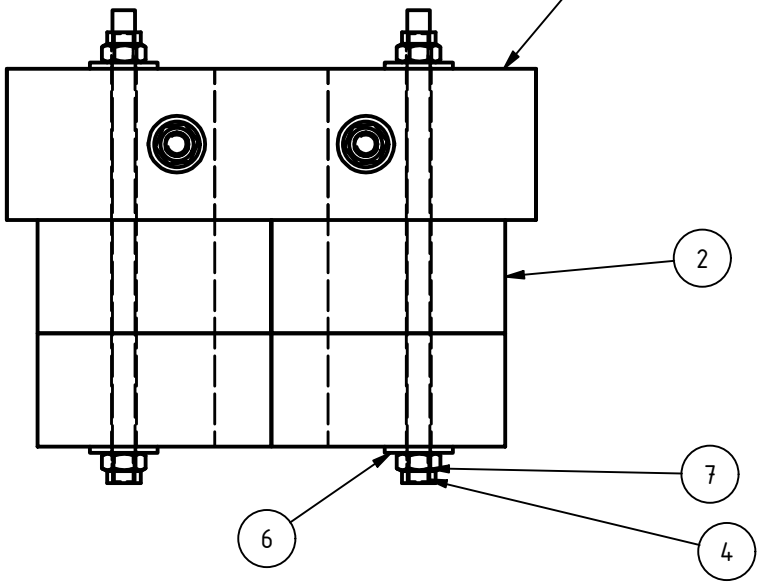


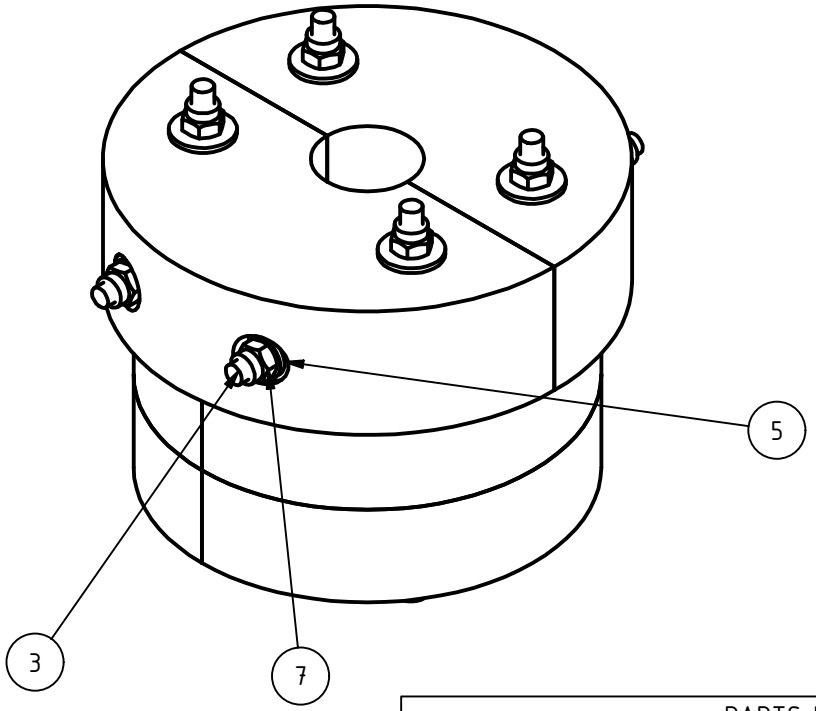


| PARTS LIST | | | |
|---|---|---|---|
| Pos. | Name | Standard | Qty |
| 1 | Wood cover | 140x40 | 2 |
| 2 | wood bearing | 123x30 | 4 |
| 3 | Threaded rod | DIN 979-A2- M6x 150 | 4 |
| 4 | Threaded rod | DIN 979-A2- M6x 125 | 4 |
| 5 | Washer | ISO 7089 - 6 | 4 |
| 6 | Washer | DIN 9021 - 6,4 | 8 |
| 7 | Hex nut | ISO 7040 - M6 | 12 |
| 8 | Wood Screw | Din 571 - 5x30 | 4 |

2.2.2-1 Wood bearing

Material: Wood

| Project | KUKATE34© | | |
|---|---|---|---|
| Titel | 2.2.2-1 Wood bearing | | |
| Mod. | Release Date 19.01.2021 | Spr. ENG | Page 1/1 |

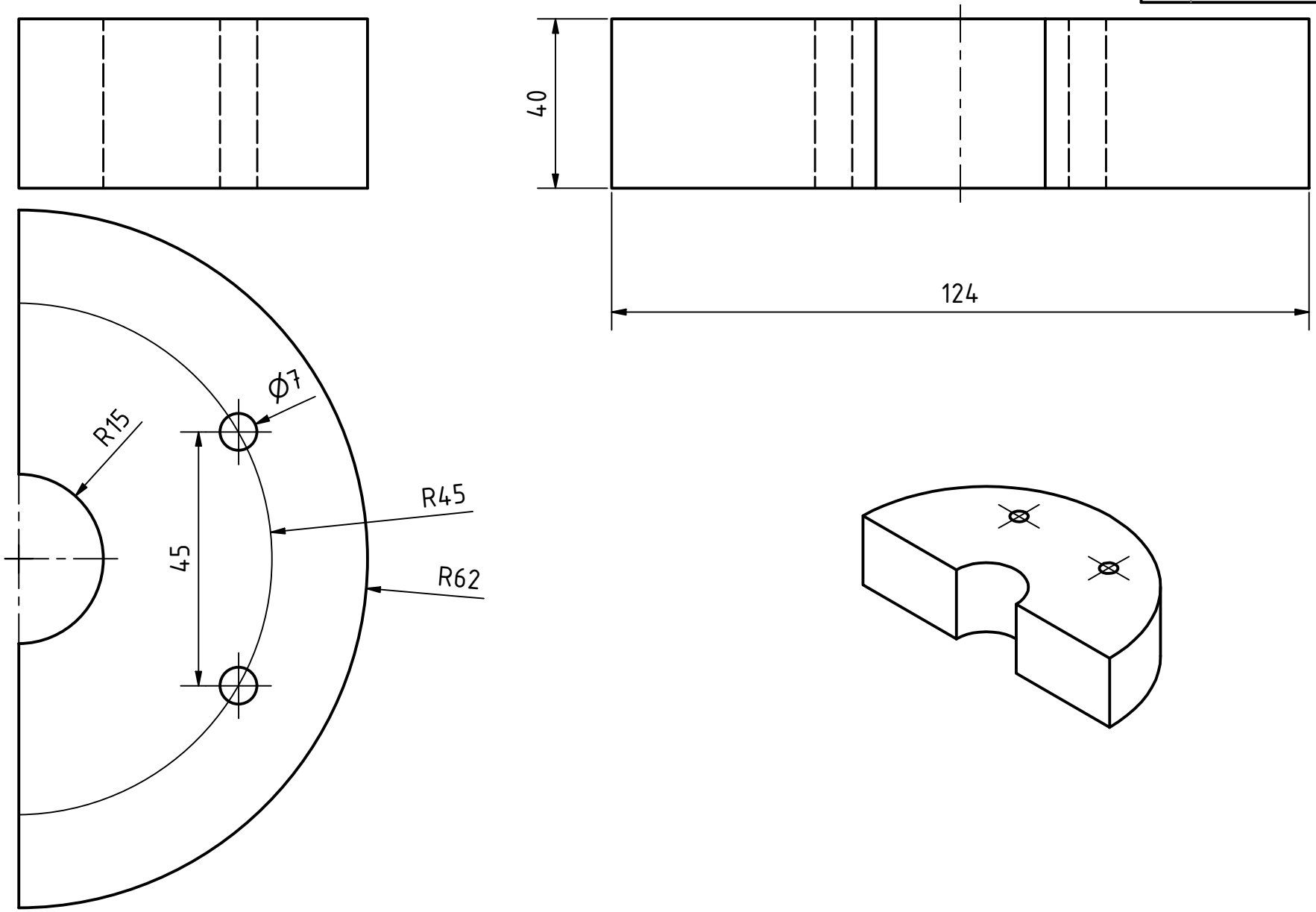

2.2.2-2 Wood cover

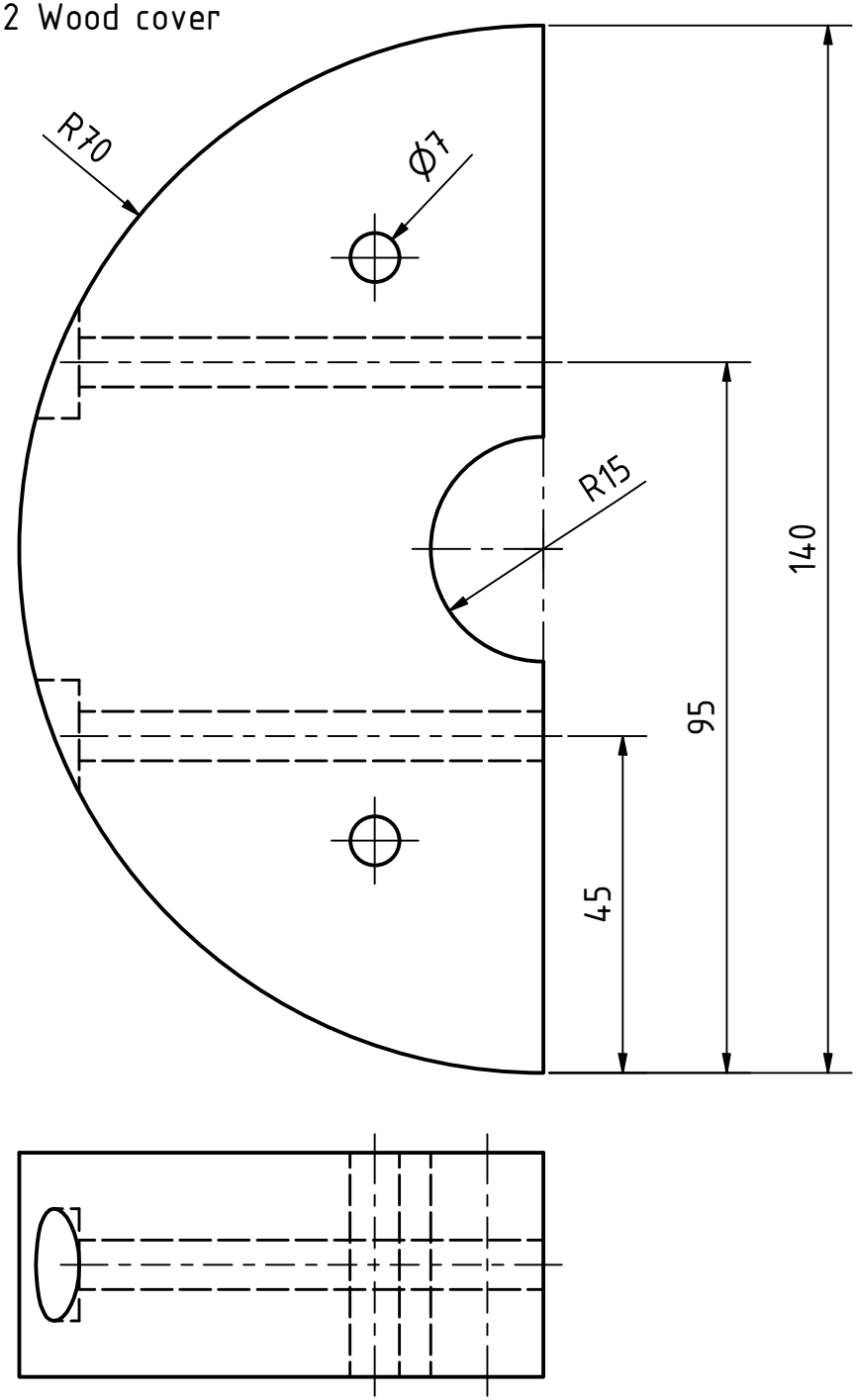


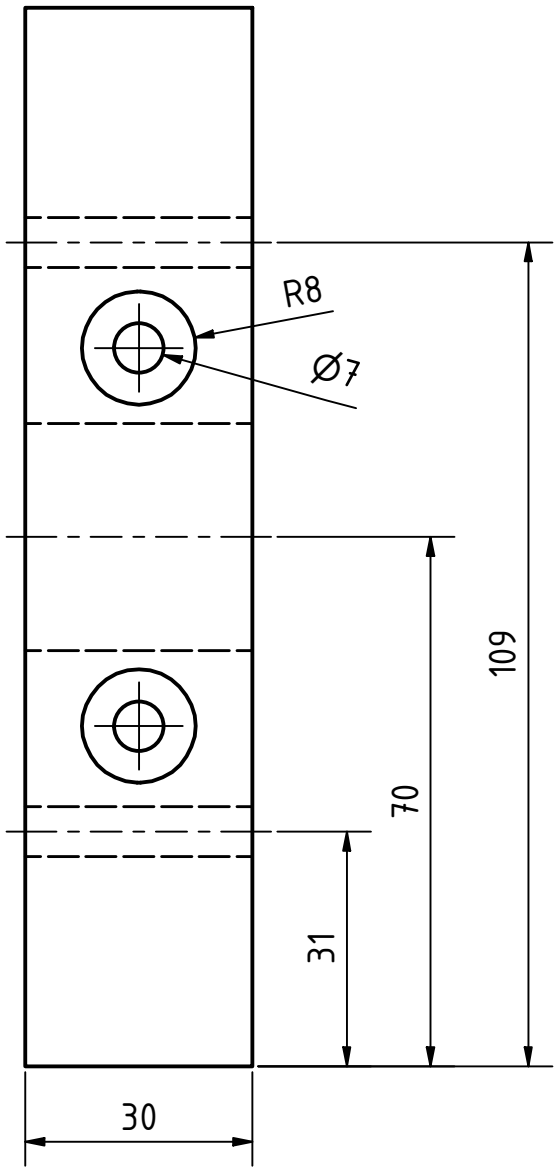


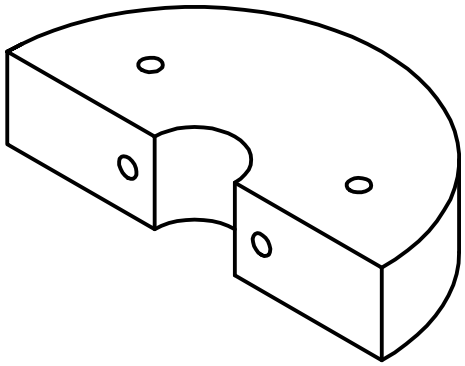

| Project | KUKATE34© | | |
|---|---|---|---|
| Titel | 2.2.2-2 Wood cover | | |
| Mod. | Release Date 11.06.2020 | Spr. ENG | Page 1/1 |

Material: Wood

2.3 Eccentric-Unit

| Projekt | KUKATE34© | | |
|---|---|---|---|
| Titel | 2.3 Eccentric-Unit | | |
| Änd. | Ausgabedatum 01.11.2021 | Spr. DE | Blatt 1/1 |

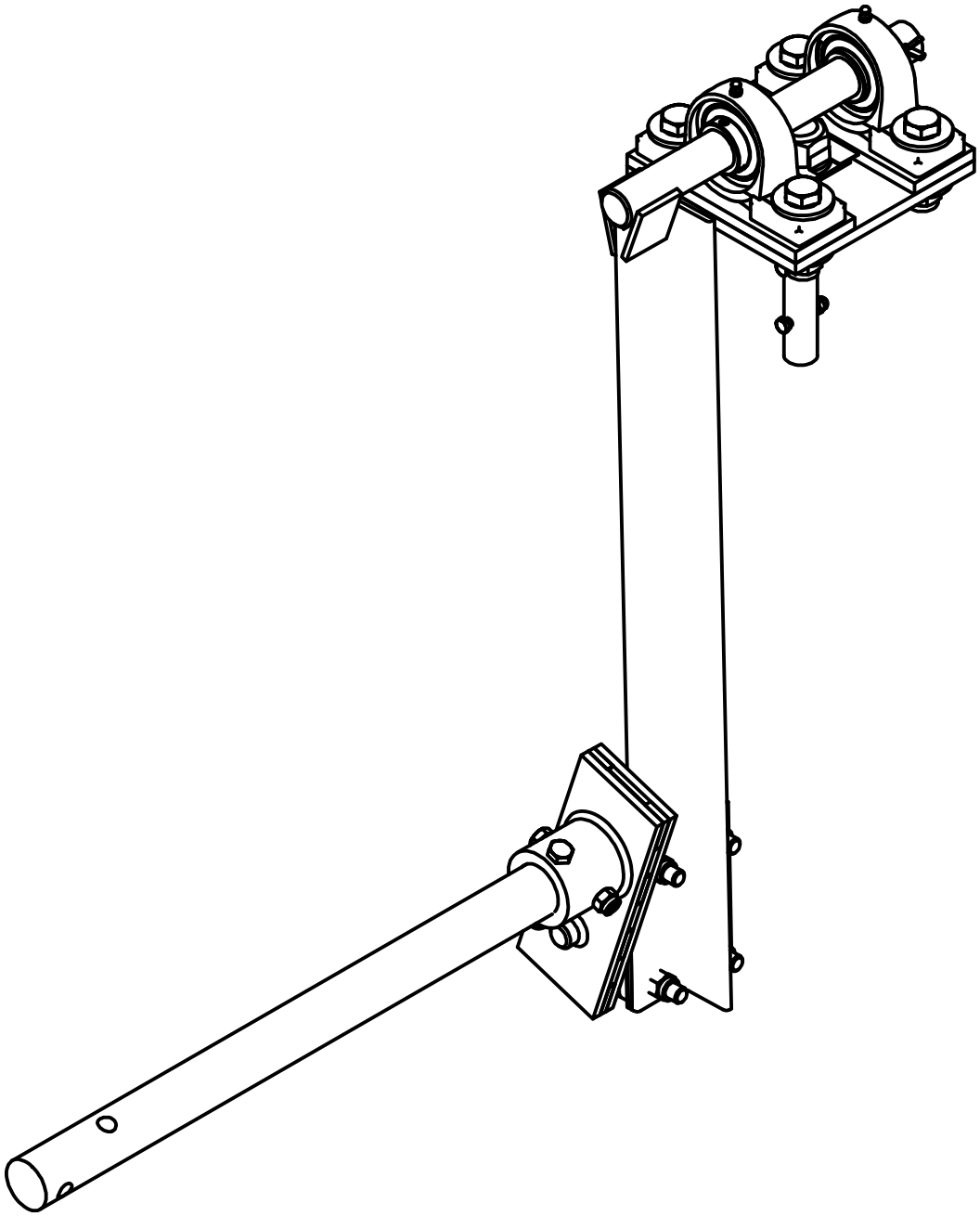

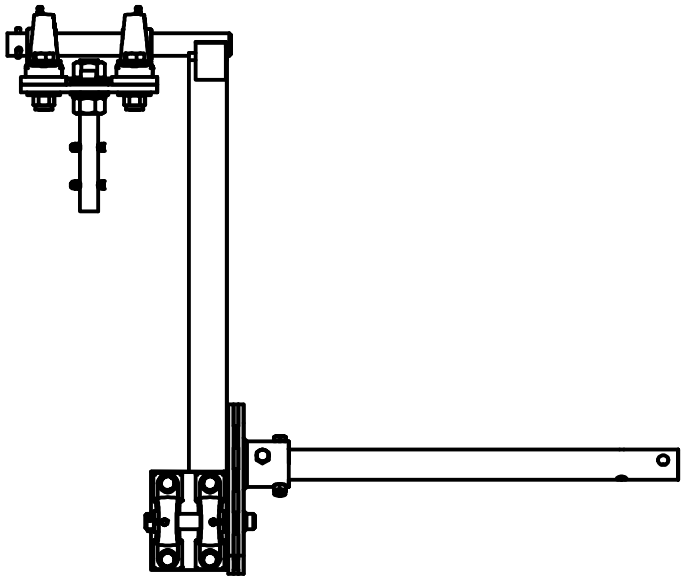

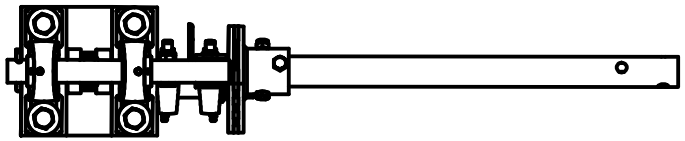

2.3.1 Eccentric

| Projekt | KUKATE34© | | |
|---|---|---|---|
| Titel | 2.3.1 Eccentric | | |
| Änd. | Ausgabedatum 20.11.2021 | Spr. DE | Blatt 1/1 |

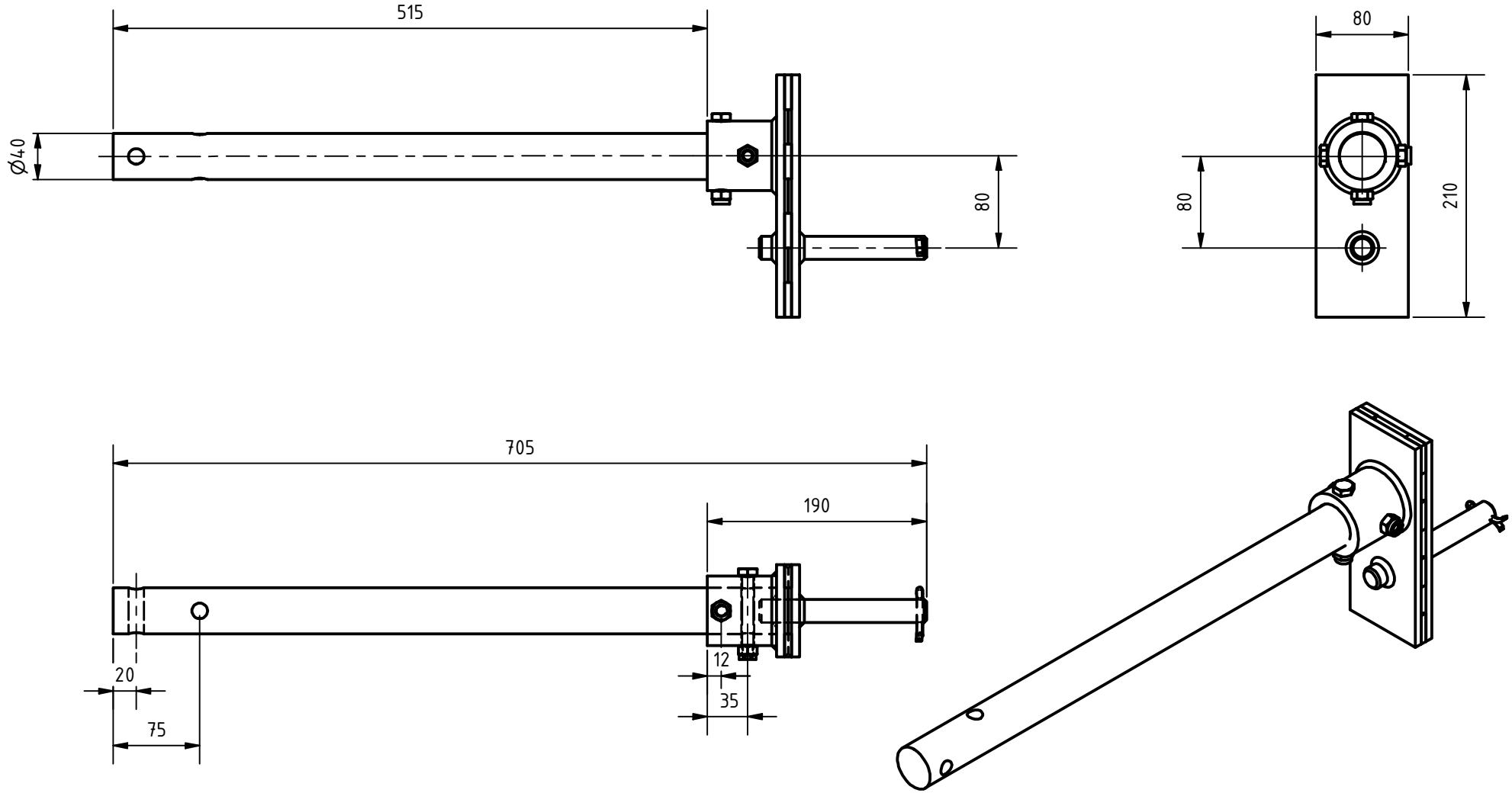

# 2.3.1 Eccentric

| Projekt | KUKATE34© | | |
|---|---|---|---|
| Titel | 2.3.1 Eccentric | | |
| Änd. | Ausgabedatum 21.07.2020 | Spr. DE | Blatt 1/1 |

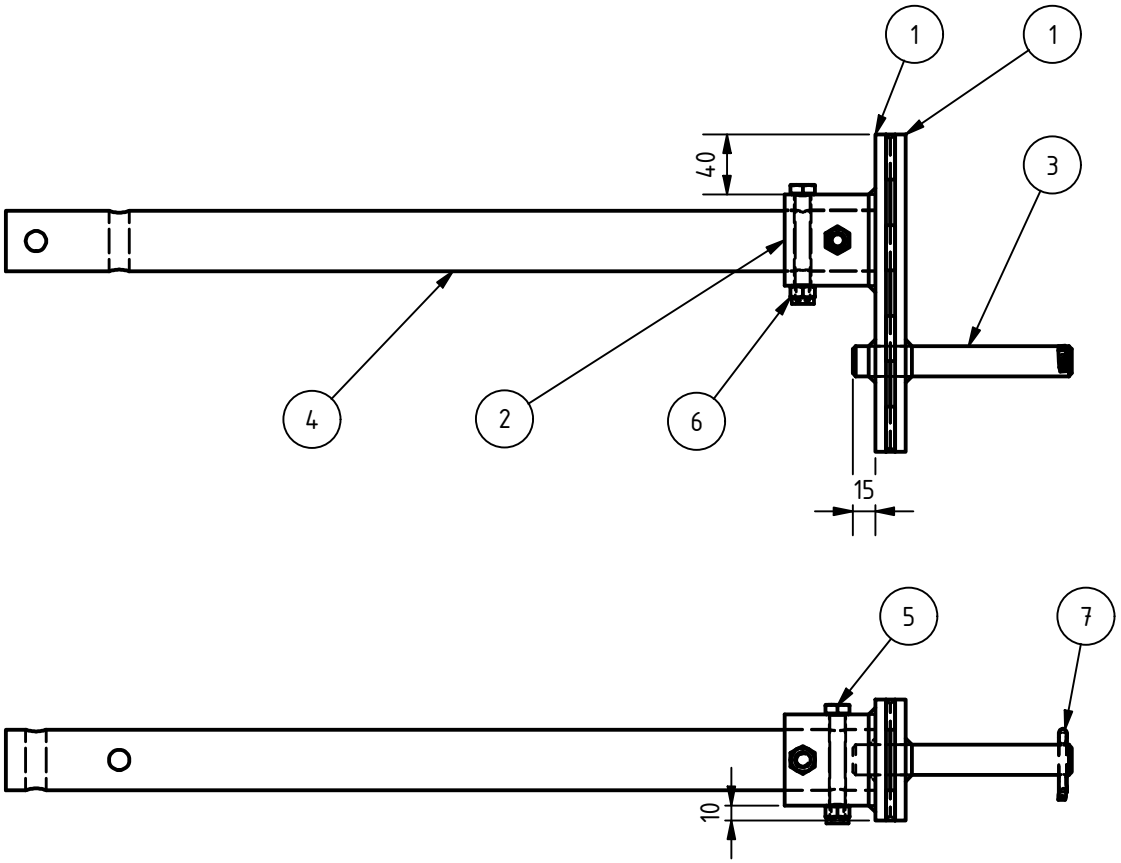


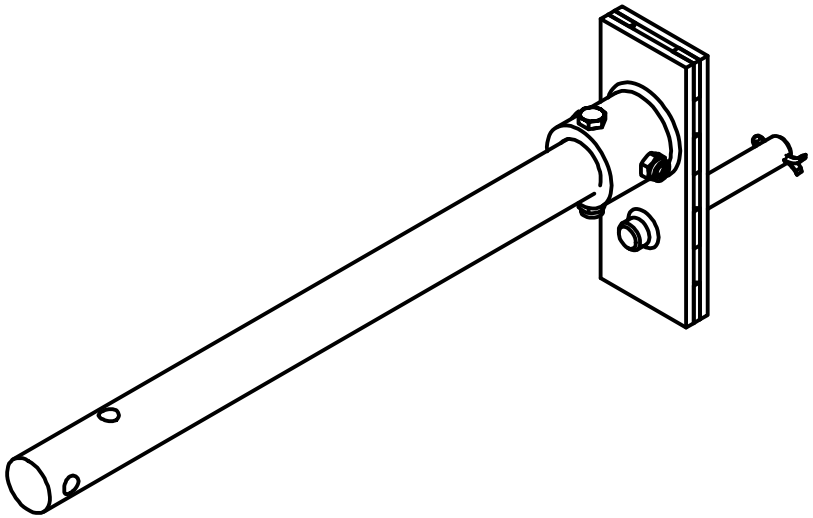

| PARTS LIST | | | | |
|---|---|---|---|---|
| Chap. | Pos. | Name | Standard | Qty |
| 2.3.1- | 1 | Flat steel | DIN EN 10058 - 210x80x10 | 2 |
| 2.3.1- | 2 | Pipe | DIN EN 10220-1 - 60,3x10x75 | 1 |
| 2.3.1- | 3 | Round steel | DIN EN 10060 - 20x115 | 1 |
| 2.3.1- | 4 | Round steel | DIN EN 10060 - 40x575 | 1 |
| 2.3.1- | 5 | Hexagon head screw | ISO 4017 - M8x70-8.8 | 2 |
| 2.3.1- | 6 | Hex nut with torque part | ISO 7040 - M8-8.8 | 2 |
| 2.3.1- | 7 | split pin | DIN EN ISO 1234 5x32 | 1 |

2.3.1-1 Flat steel 210x80x10

Material: Steel

| Project | KUKATE34© | | |
|---|---|---|---|
| Titel | 2.3.1-1 Flat steel 210x80x10 | | |
| Mod. | Release Date 11.06.2020 | Spr. ENG | Page 1/1 |

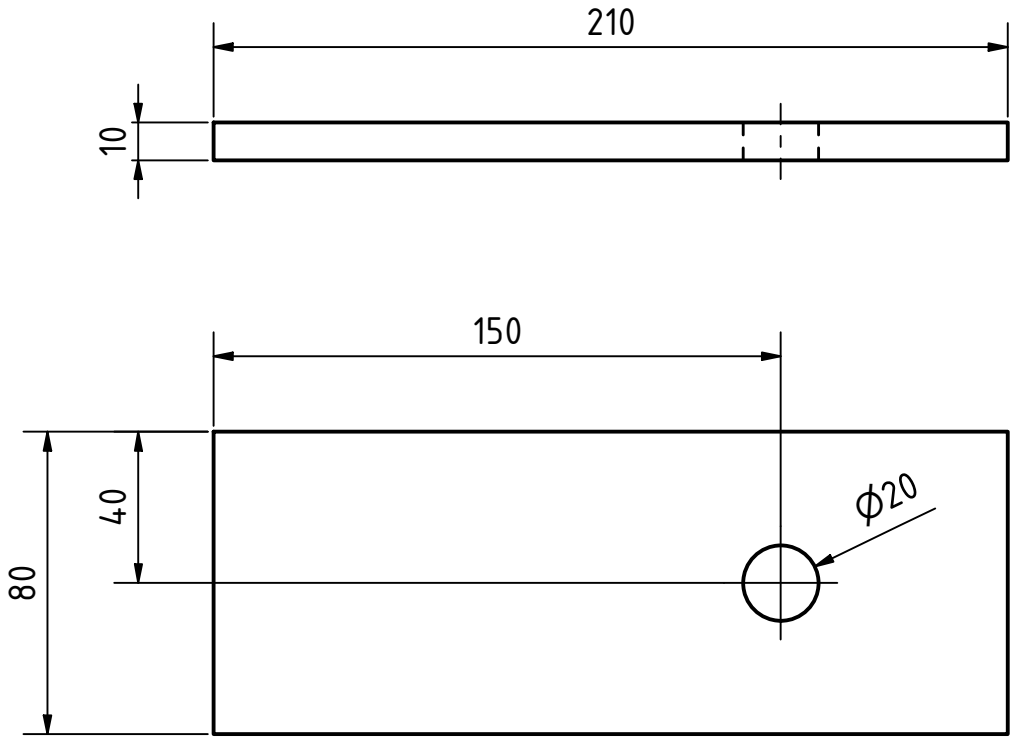


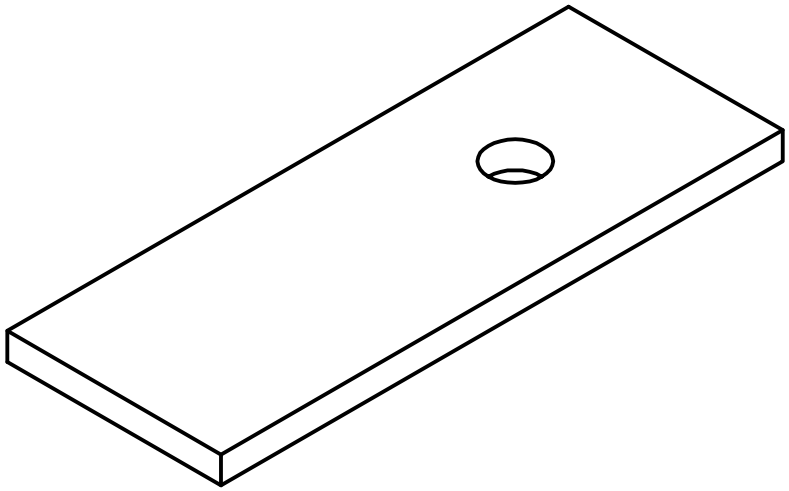

2.3.1-2 Pipe 60,3x10x60

| Project | KUKATE34© | | |
|---|---|---|---|
| Titel | 2.3.1-2 Pipe 60,3x10x75 | | |
| Mod. | Release Date 26.11.2021 | Spr. ENG | Page 1/1 |

Material: Steel

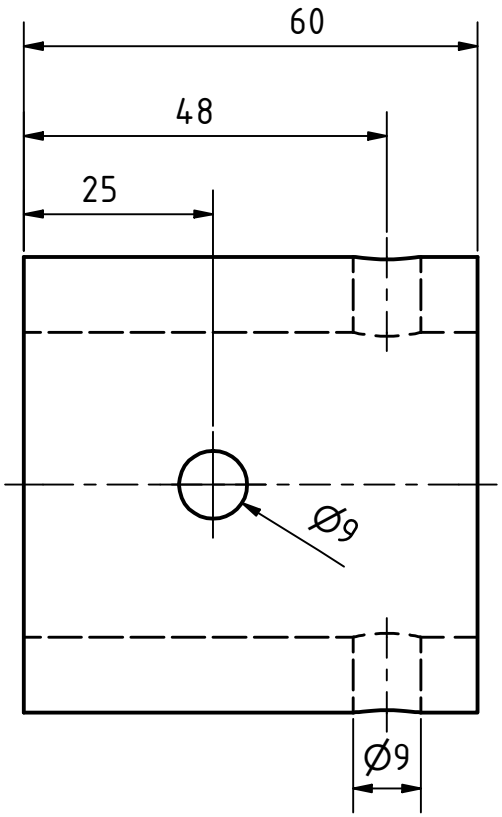


Holes drilled togehter with 2.3.1 - 4 Round

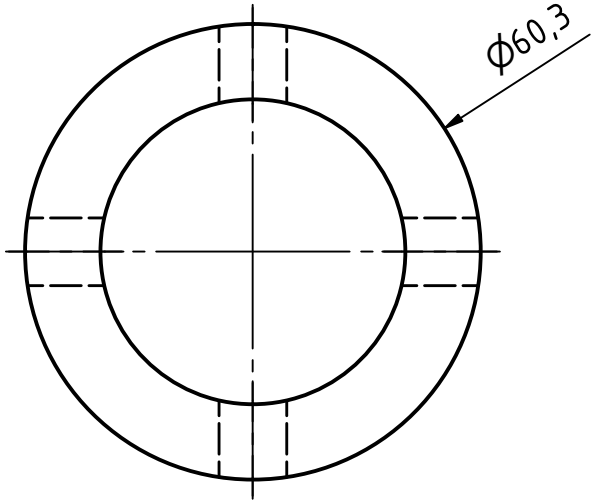


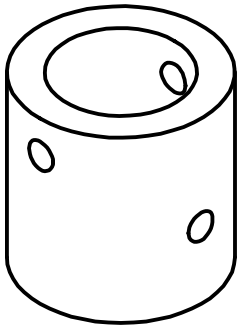

2.3.1-3 Round steel 20x115

| Project | KUKATE34© | | |
|---|---|---|---|
| Titel | 2.3.1-3 Round steel 20x115 | | |
| Mod. | Release Date 21.07.2020 | Spr. ENG | Page 1/1 |

Material: Steel

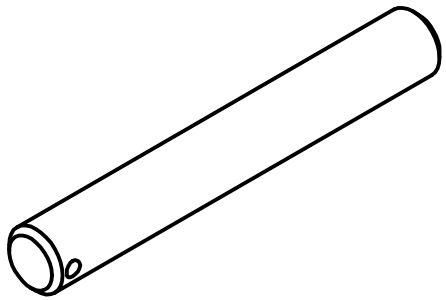

2.3.1-4 Round steel 40x575

| Project | KUKATE34© | | |
|---|---|---|---|
| Titel | 2.3.1-4 Round steel 40x575 | | |
| Mod. | Release Date 29.11.2021 | Spr. ENG | Page 1/1 |

Material: Steel

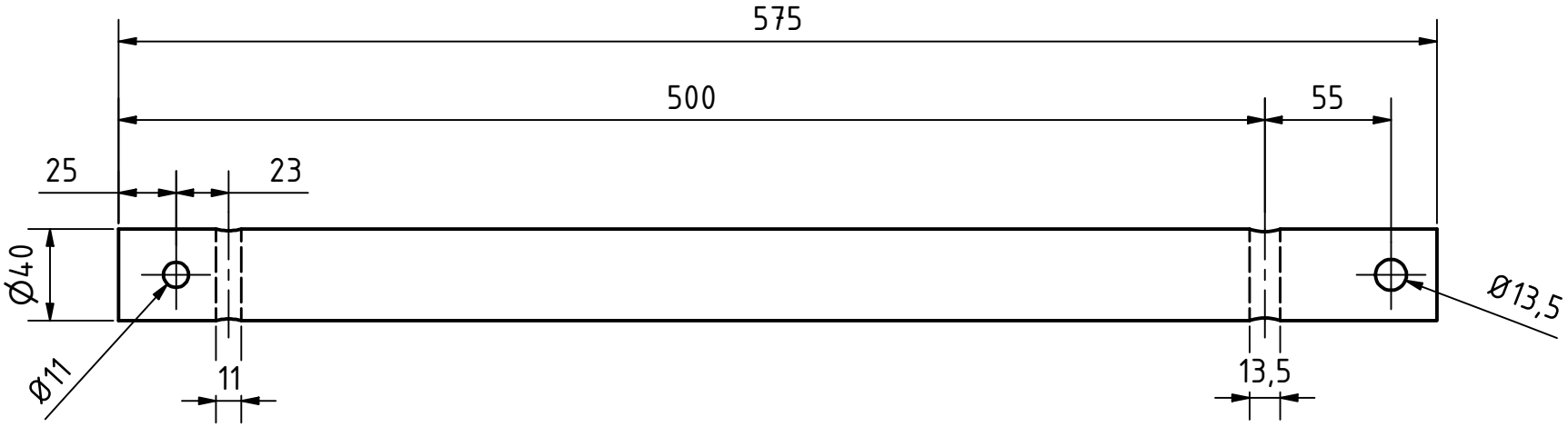


Ø11 mm holes drilled togehter with 2.3.1 - 2

Ø13.5 mm holes drilled together witch 2.1 - 6

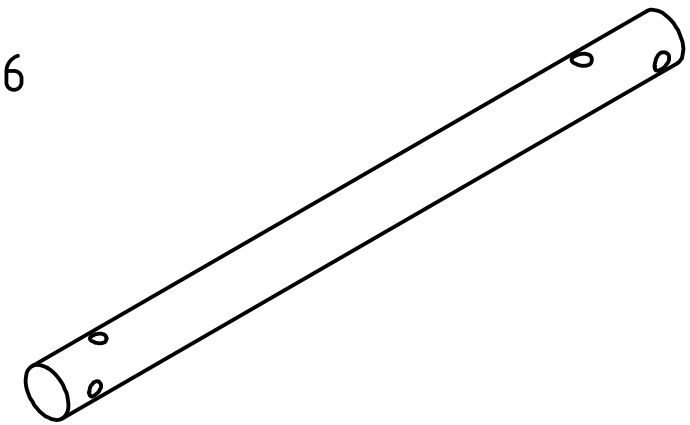

# 2.3.2 Piston rod

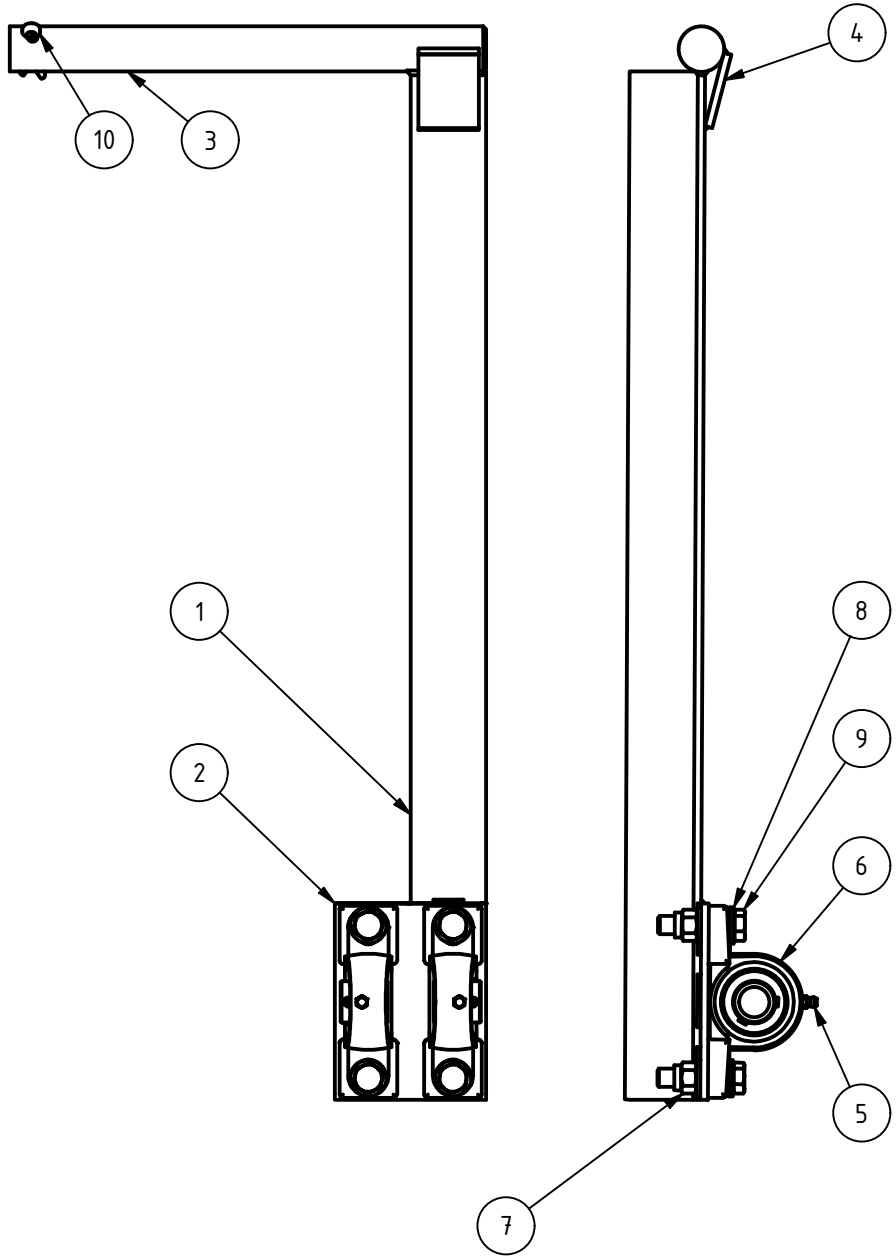


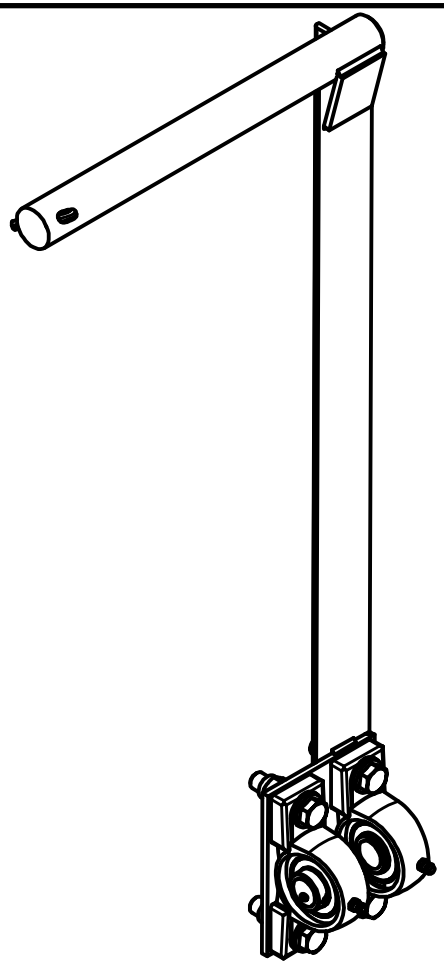

| Project | KUKATE34© | | |
|---|---|---|---|
| Titel | 2.3.2 Piston rod | | |
| Mod. | Release Date 21.07.2020 | Spr. ENG | Page 1/1 |

PARTS LIST

| Chap. | Pos. | Name | Standard | Qty |
|---|---|---|---|---|
| 2.3.2- | 1 | L-Profile | DIN EN 10056-1 - L50x50x5-680 | 1 |
| 2.3.2- | 2 | Plate | DIN EN 10025 - 140x130x5 | 1 |
| 2.3.2- | 3 | Round steel | EN 10060 - 30x400 | 1 |
| 2.3.2- | 4 | Flat steel | DIN EN 10058 - 50x40x5 | 1 |
| 2.3.2- | 5 | Conical grease nipple | DIN 71412 AM6 | 2 |
| 2.3.2- | 6 | Pedestal bearing | UCP204 | 2 |
| 2.3.2- | 7 | Hex nut with torque part | ISO 7040-M12-8.8 | 4 |
| 2.3.2- | 8 | Washer | ISO 7089-12 | 8 |
| 2.3.2- | 9 | Hexagon head screw | ISO 4017-M12x50-8.8 | 4 |
| 2.3.2- | 10 | Split pin | ISO 1234-6,3x45 | 1 |

2.3.2-1 L-Profile 50x50x5-680

| Project | KUKATE34© | | |
|---|---|---|---|
| Titel | 2.3.2-1 L-Profile 50x50x5-680 | | |
| Mod. | Release Date 21.07.2020 | Spr. ENG | Page 1/1 |

Material: Steel

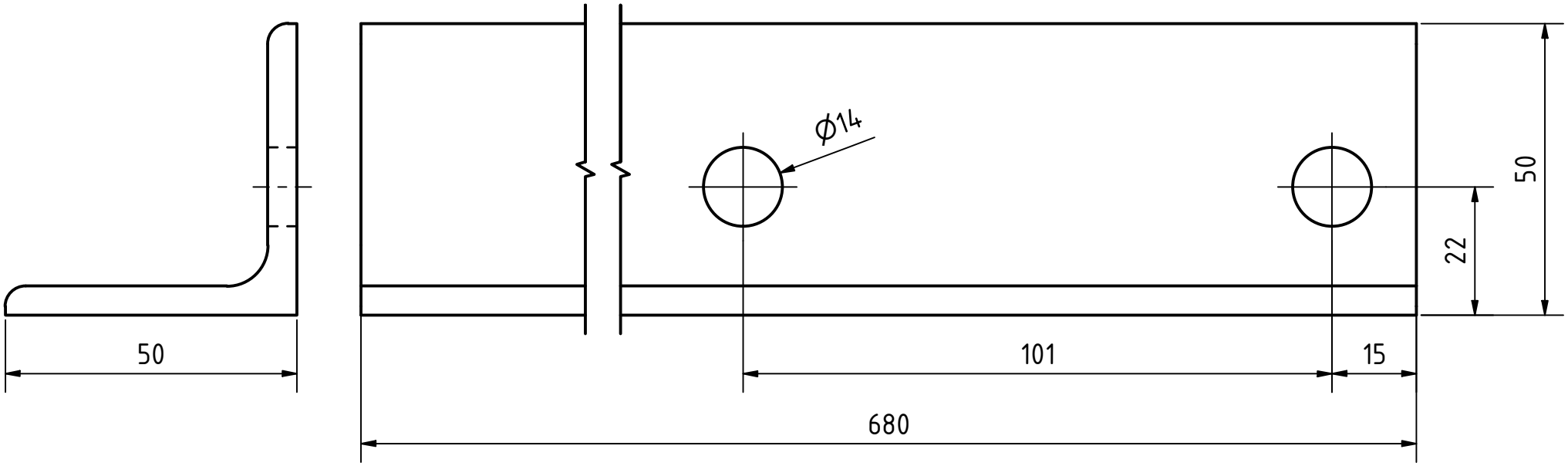

2.3.2-2 Plate 130x100x5

| Project | KUKATE34© | | |
|---|---|---|---|
| Titel | 2.3.2-2 Plate 130x100x5 | | |
| Mod. | Release Date 21.07.2020 | Spr. ENG | Page 1/1 |

Material: Steel

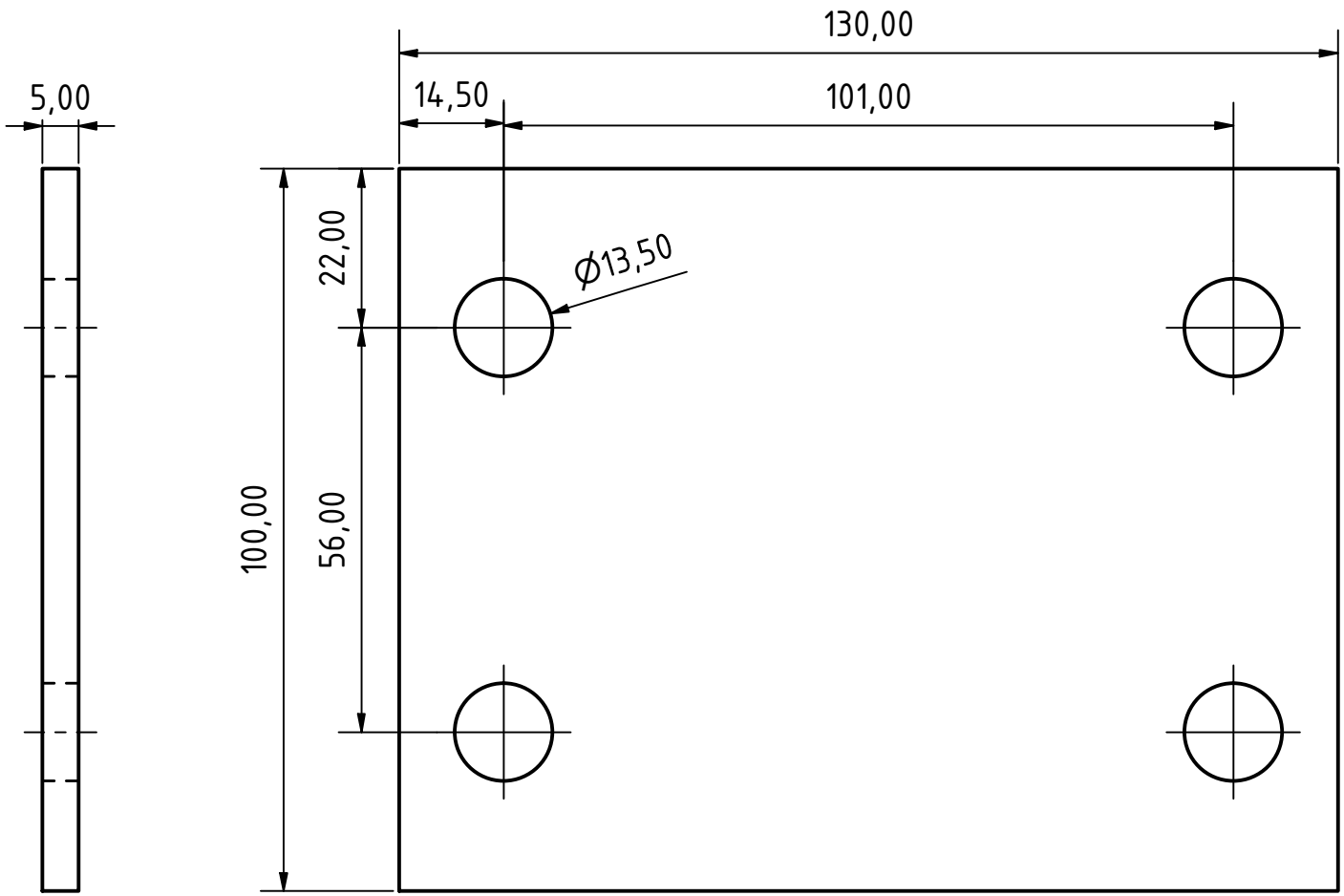

2.3.2-3 Round steel 20x115

| Project | KUKATE34© | | |
|---|---|---|---|
| Titel | 2.3.2-3 Round steel 20x115 | | |
| Mod. | Release Date 21.07.2020 | Spr. ENG | Page 1/1 |

Material: Steel

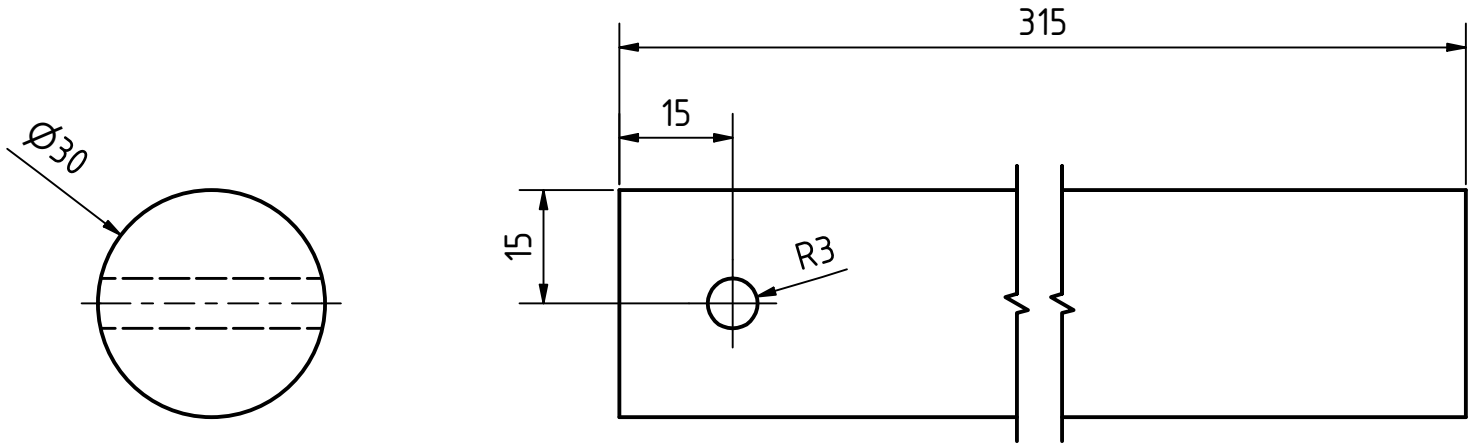

2.3.2-4 Flat steel
50x40x5

| Project | KUKATE34© | | |
|---|---|---|---|
| Titel | 2.3.2-4 Flat steel 50x40x5 | | |
| Mod. | Release Date 21.07.2020 | Spr. ENG | Page 1/1 |

Material: Steel

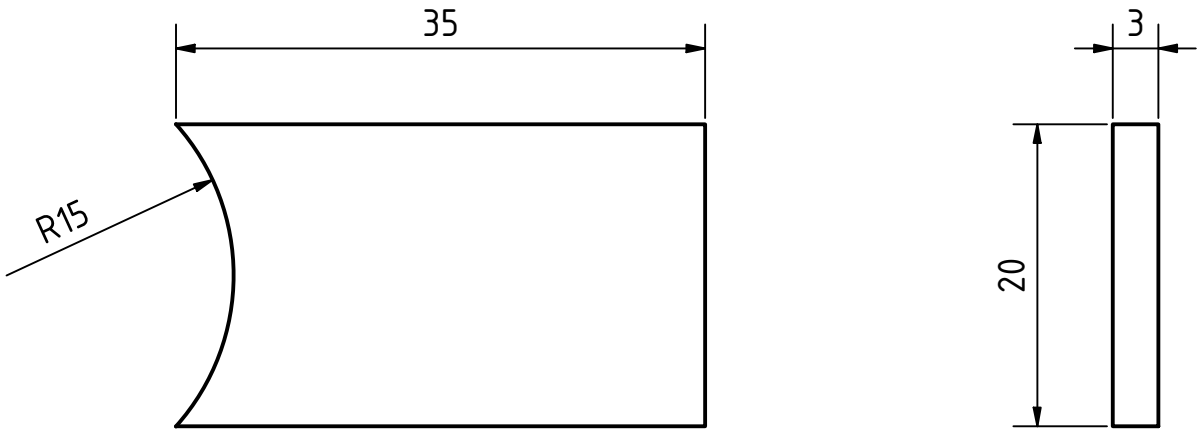

3.3.3 - 3 Threaded rod

| | | | |
|---|---|---|---|
| Projekt | KUKATE34© | | |
| Titel | 2.3.3 - 3 Threaded rod | | |
| Änd. | Ausgabedatum 20.11.2021 | Spr. DE | Blatt 1/1 |

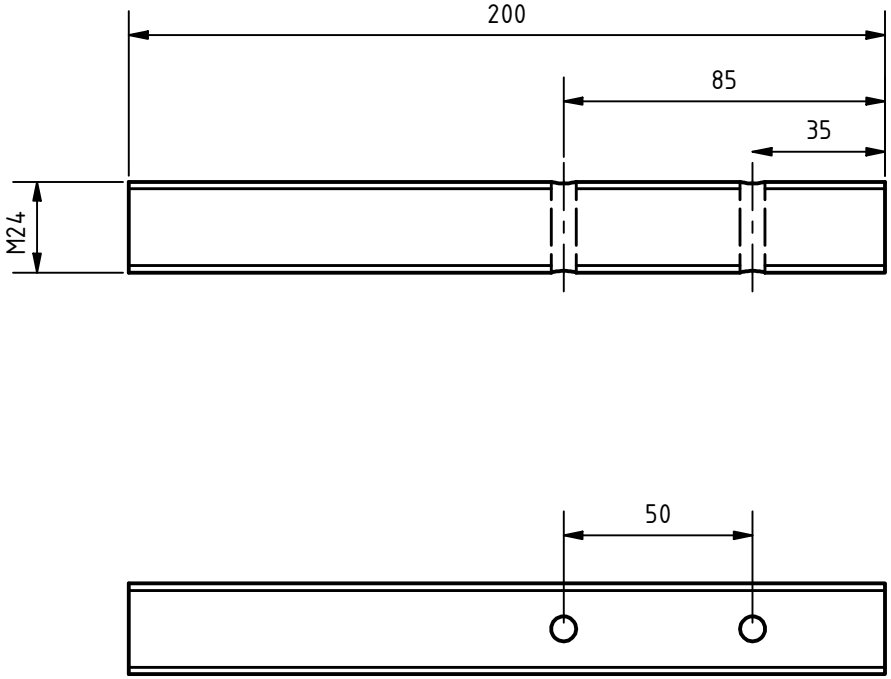


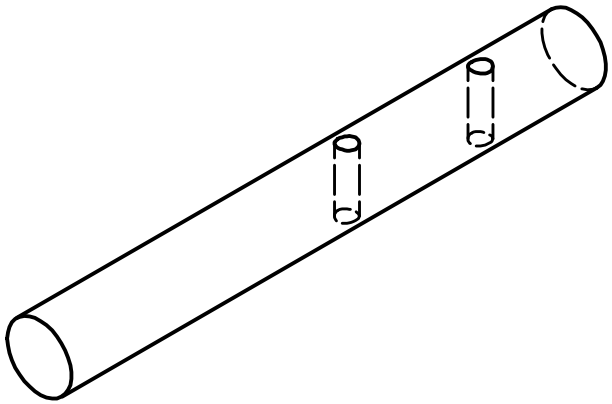

2.3.3 Mortise joint

| Project | KUKATE34© | | |
|---|---|---|---|
| Titel | 2.3.3 Mortise joint | | |
| Mod. | Release Date 21.07.2020 | Spr. ENG | Page 1/1 |

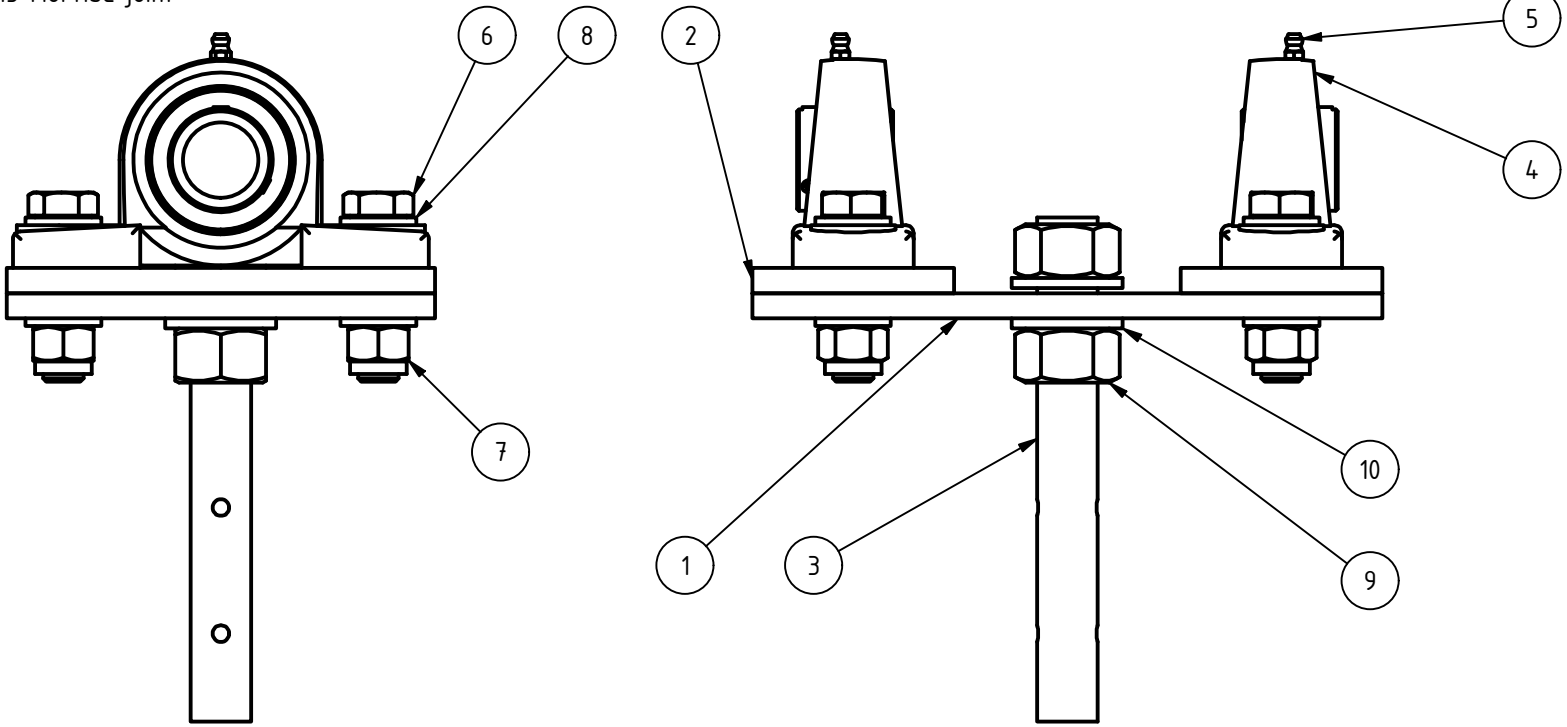


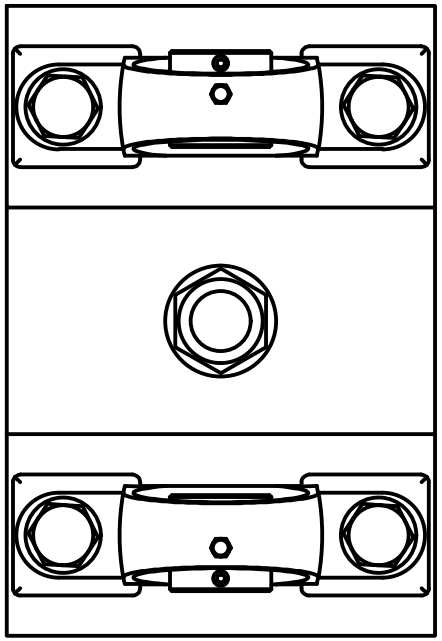

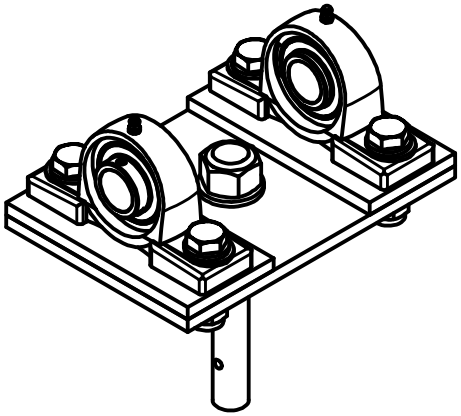

| PARTS LIST | | | | |
|---|---|---|---|---|
| Chap. | Pos. | Name | Standard | Qty |
| 2.3.3- | 1 | Plate | DIN EN 10025 - 250x170x10 | 1 |
| 2.3.3- | 2 | Flat steel | DIN EN 10058 - 170x80x10 | 2 |
| 2.3.3- | 3 | Threaded rod | DIN 976-A2 - M24x250 | 1 |
| 2.3.3- | 4 | Pedestal bearing | UCP206 | 2 |
| 2.3.3- | 5 | Conical grease nipple | DIN 71412 AM6 | 2 |
| 2.3.3- | 6 | Hexagon head screw | ISO 4017 - M16x65-8.8 | 4 |
| 2.3.3- | 7 | Hex nut | ISO 7040 - M16-8.8 | 4 |
| 2.3.3- | 8 | Washer | ISO 7089 - 16 | 8 |
| 2.3.3- | 9 | Hex nut | ISO 4032 - M24-8.8 | 2 |
| 2.3.3- | 10 | Washer | ISO 7089 - 24 | 2 |

2.3.3-1 Plate 250x170x10

| Project | KUKATE34© | | |
|---|---|---|---|
| Titel | 2.3.3-1 Plate 250x170x10 | | |
| Mod. | Release Date 21.07.2020 | Spr. ENG | Page 1/1 |

Material: Steel

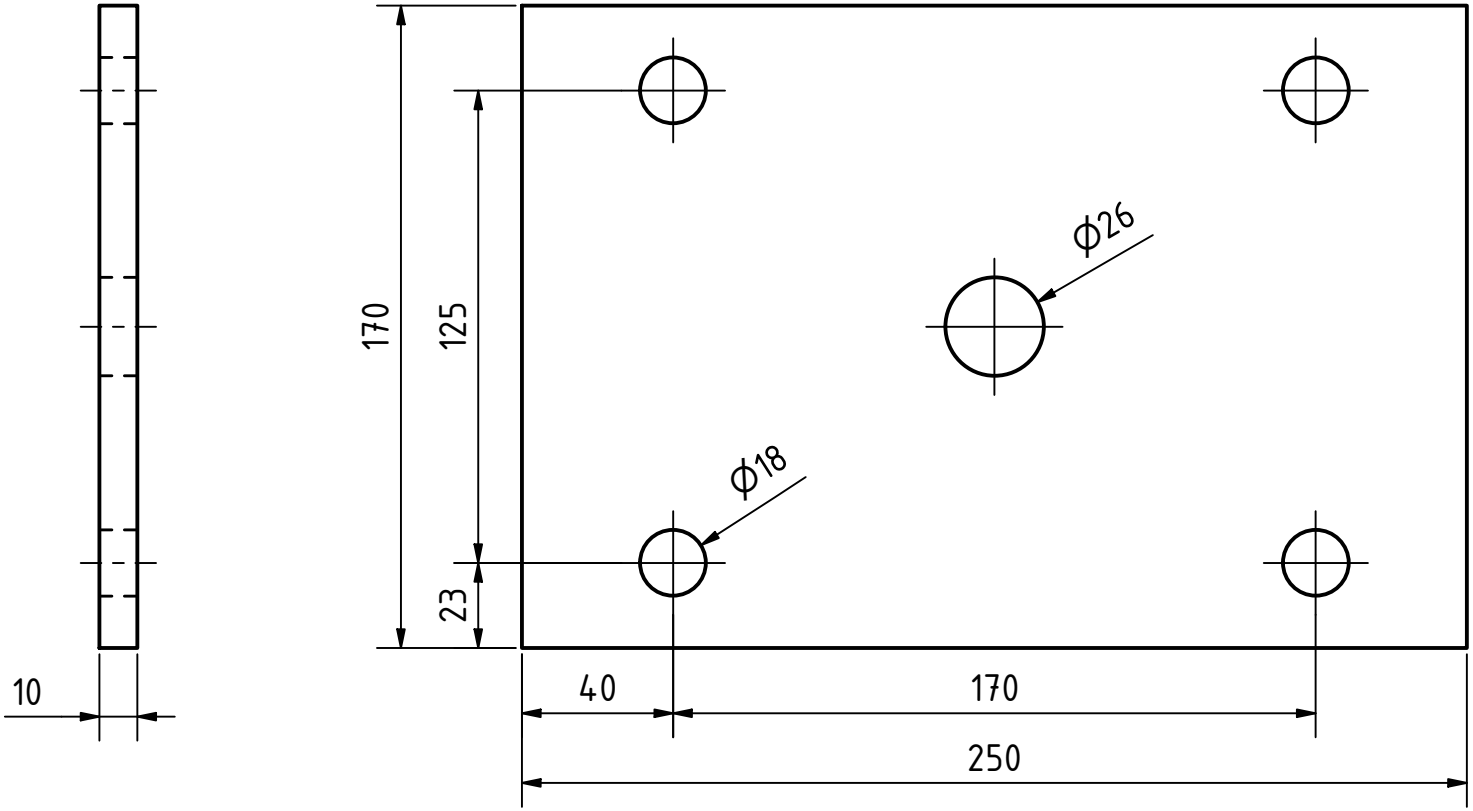

2.3.3-2 Flat steel 170x80x10

| Project | KUKATE34© | | |
|---|---|---|---|
| Titel | 2.3.3-2 Flat steel 170x80x10 | | |
| Mod. | Release Date 21.07.2020 | Spr. ENG | Page 1/1 |
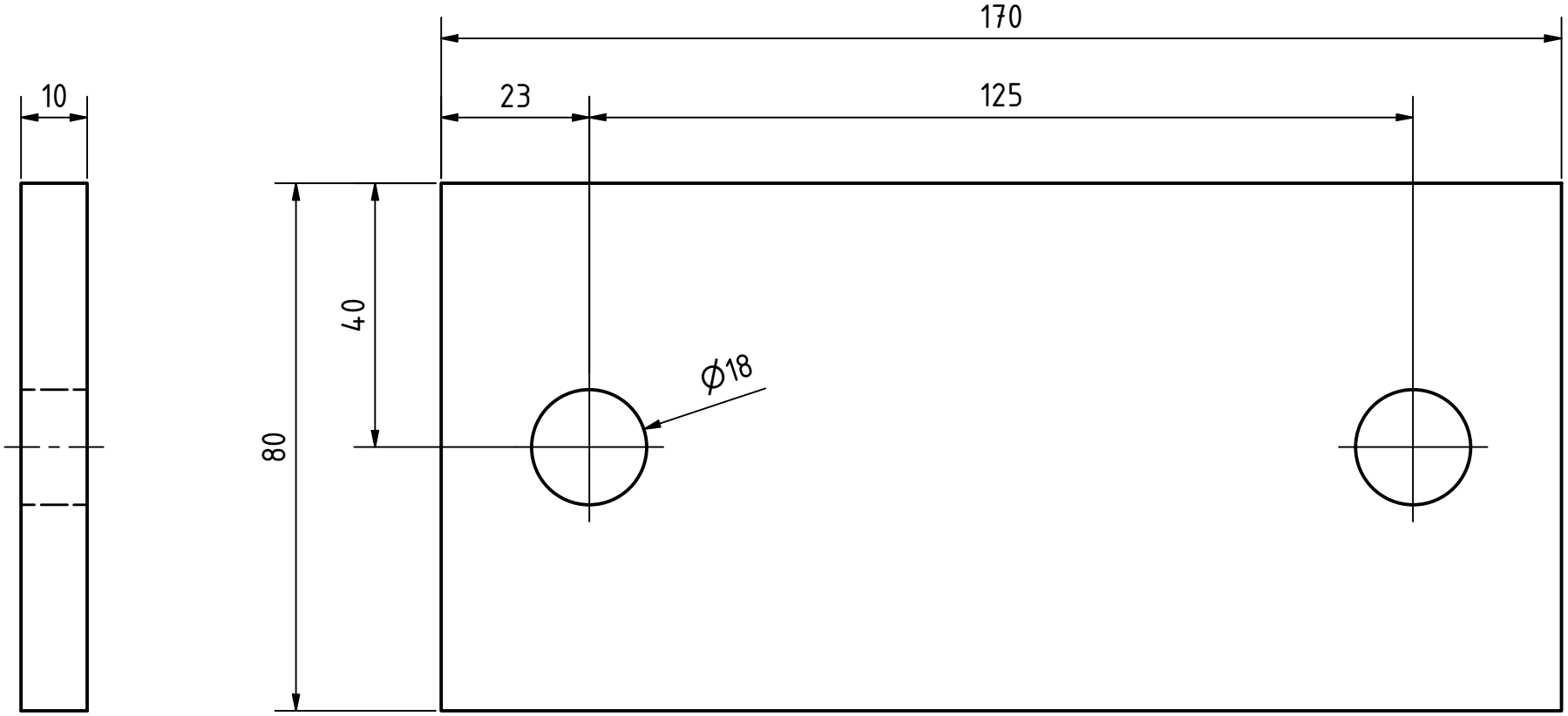
Material: Steel